Ice Cream Dipping Freezers

(WITHOUT SNEEZE GUARD)

ITEM:	44590	48657	44588	44589	48648
MODEL:	FR-CN-0160-S	FR-CN-0260-S	FR-CN-0360-S	FR-CN-0460-S	FR-CN-0560-S

Scoop and serve from the front counter with an ice cream dipping freezer.

These dipping freezers hold from 6 to 22 three-gallon tubs at -15°F to 6.8°F (-26°C to -14°C), in five widths from 26" to 71". Double sliding doors with locks keep product secure between services.

The exterior is white powder-coated steel with a precoated steel interior wall, and plastic trim on the edges helps prevent injuries and damage. Casters, two with brakes, make each unit easy to move and clean around.

- **6 to 22 three-gallon tub capacity**
- **26" to 71" widths**
- **Double sliding doors with locks**
- **White powder-coated steel exterior**
- **Plastic edge trim**
- **Casters, 2 with brakes**

Sneeze guard not included. An optional flat glass sneeze guard is sold separately for each size: 44590 – AR268 • 48657 – AR077 • 44588 – AR269 • 44589 – AC958 • 48648 – AR270

44590 • 26"

48657 • 39"

44588 • 50"

44589 • 60"

48648 • 71"

AT A GLANCE

Certification	cETLus • ETL Sanitation
Warranty	1 Year Parts • 1 Year Labor

Ambient Conditions Not To Exceed
80°F
(26°C)
55% Humidity Humidité
Conditions Ambiantes À Ne Pas Dépasser

Telephone: 1-800-465-0234 Fax: (905) 607-0234 Email: sales@omcan.com Website: www.omcan.com

AUTHORIZED DEALER

Shipped by Freight
cETLus Certified
ETL Sanitation Certified
1 Year Parts Warranty
1 Year Labor Warranty
NEMA 5-15P Plug Type

TECHNICAL SPECIFICATION

	44590 FR-CN-0160-S	**48657** FR-CN-0260-S	**44588** FR-CN-0360-S	**44589** FR-CN-0460-S	**48648** FR-CN-0560-S
Width	26"	39"	50"	60"	71"
Capacity (3-Gallon Tubs)	4 + 2	6 + 4	8 + 6	10 + 8	12 + 10
Temperature Range	-15°F to 6.8°F (-26°C to -14°C)	-15°F to 6.8°F (-26°C to -14°C)	-15°F to 6.8°F (-26°C to -14°C)	-15°F to 6.8°F (-26°C to -14°C)	-15°F to 6.8°F (-26°C to -14°C)
Doors	Double Sliding	Double Sliding	Double Sliding	Double Sliding	Double Sliding
Compressor	0.25 HP+	0.4 HP+	0.4 HP+	0.5 HP+	0.4 HP+
Amps	3 A	3 A	4 A	4 A	4 A
Casters	4 (2 with brakes)	4 (2 with brakes)	4 (2 with brakes)	4 (2 with brakes)	6 (2 with brakes)
Net Weight	154 lb (70 kg)	127 lb (58 kg)	242.5 lb (110 kg)	280 lb (127 kg)	194 lb (88 kg)
Net Dimensions (WDH)	26" x 28" x 34.5" (665 x 715 x 876 mm)	39" x 28" x 34.5" (995 x 715 x 876 mm)	49.6" x 28" x 34.5" (1260 x 715 x 876 mm)	60" x 28" x 34.5" (1524 x 715 x 876 mm)	71" x 28" x 34.5" (1800 x 715 x 876 mm)
Sneeze Guard	Not included	Not included	Not included	Not included	Not included
Optional Sneeze Guard (Sold Separately)	Item AR268	Item AR077	Item AR269	Item AC958	Item AR270
Certification	cETLus • ETL Sanitation	cETLus • ETL Sanitation	cETLus • ETL Sanitation	cETLus • ETL Sanitation	cETLus • ETL Sanitation
Warranty	1 Year Parts • 1 Year Labor	1 Year Parts • 1 Year Labor	1 Year Parts • 1 Year Labor	1 Year Parts • 1 Year Labor	1 Year Parts • 1 Year Labor

TECHNICAL DRAWING

Item: 44590

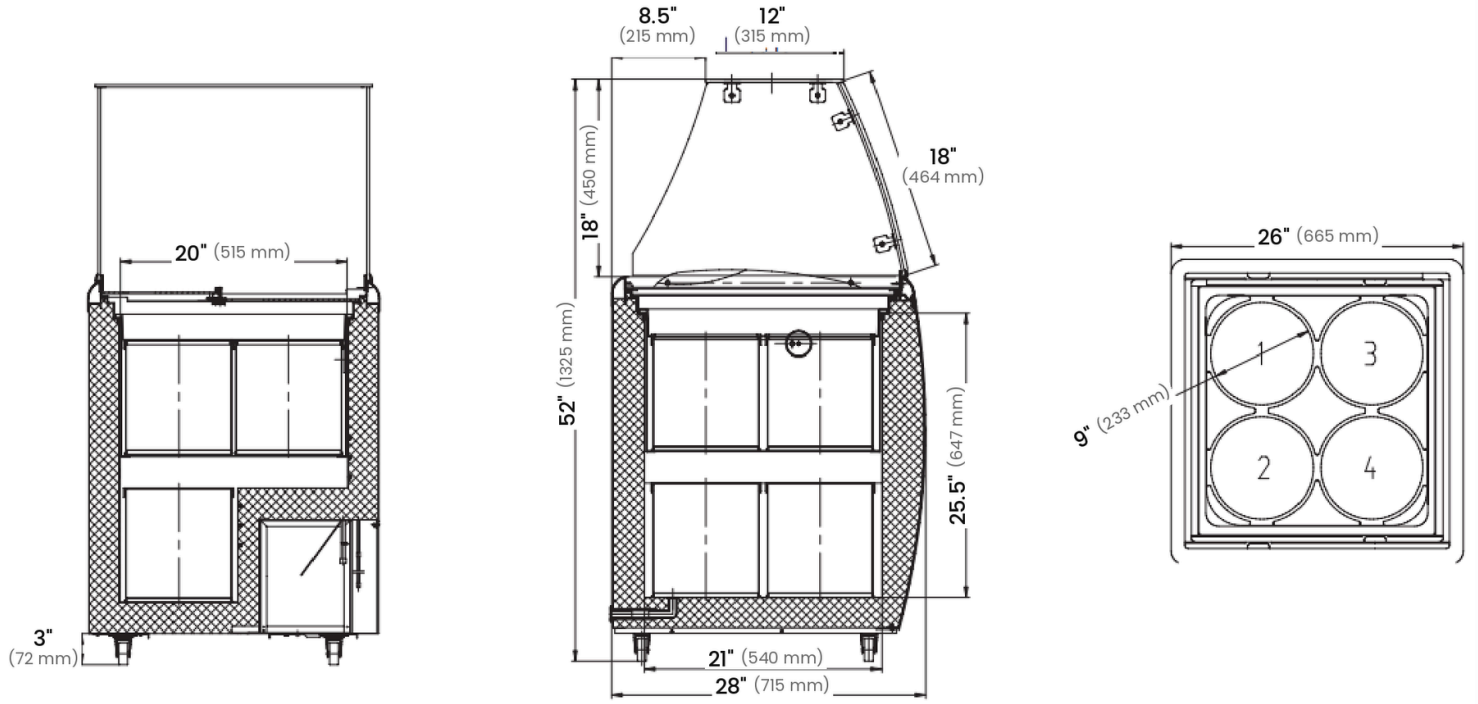

Item: 48657

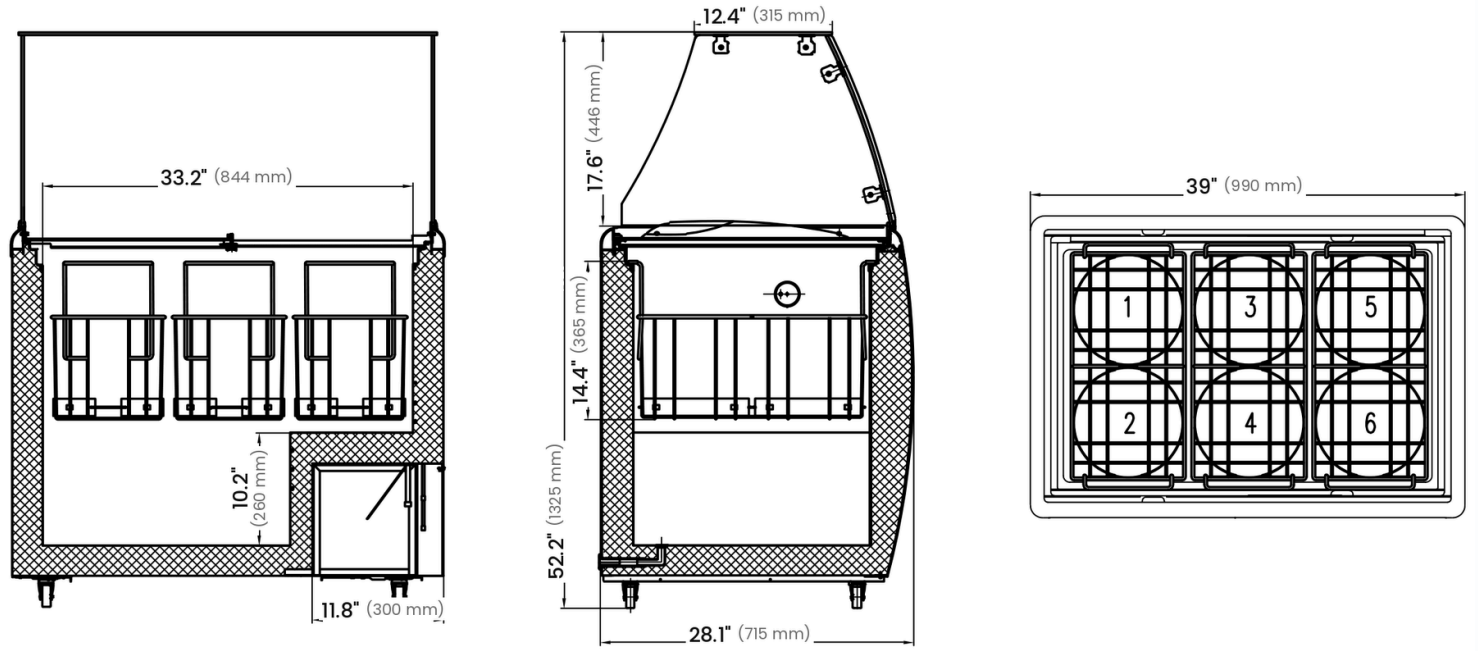

TECHNICAL DRAWING

Item: 44588

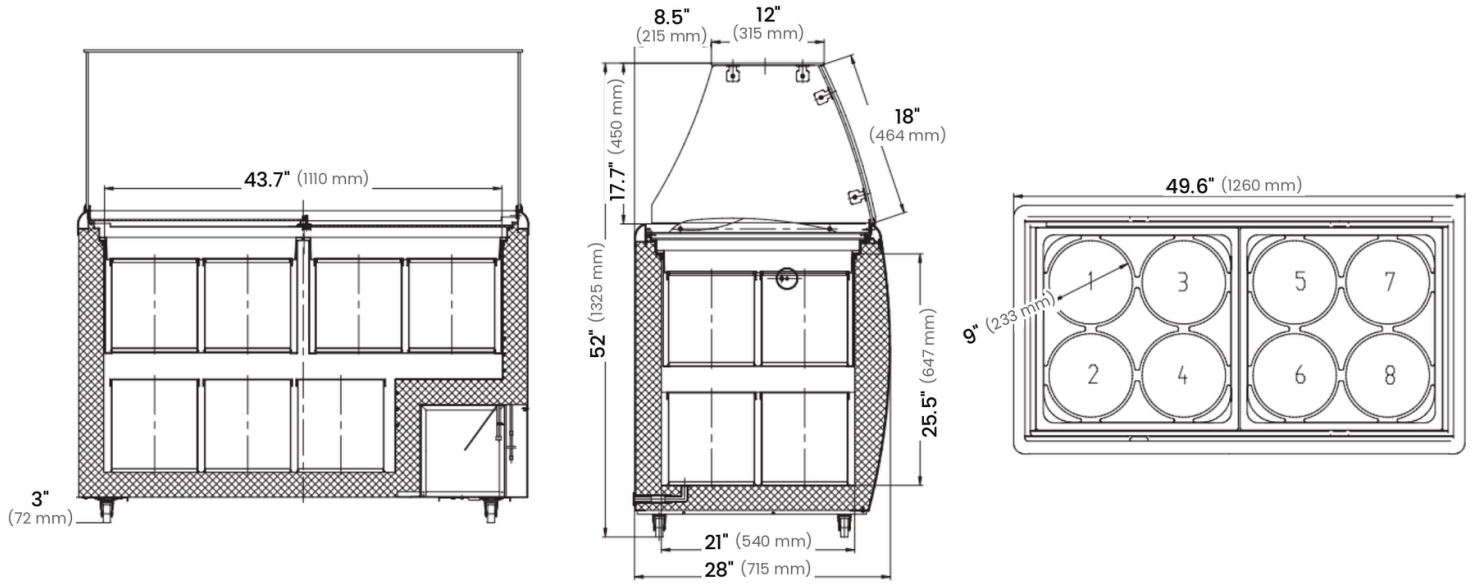

Item: 44589

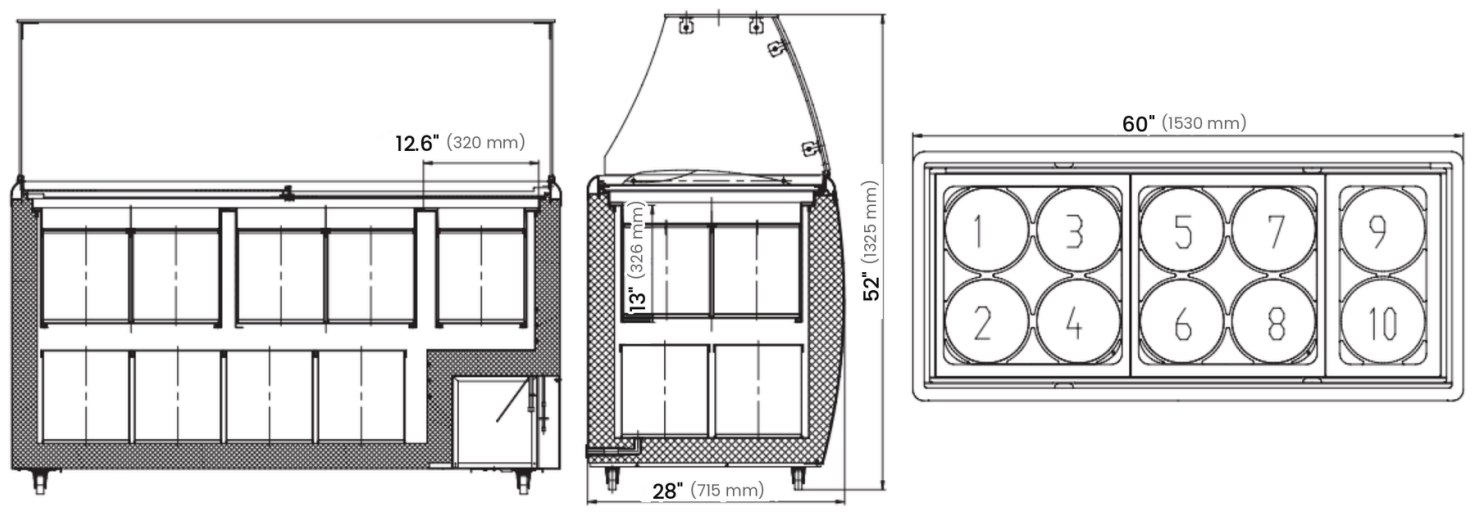

TECHNICAL DRAWING

Item: 48648

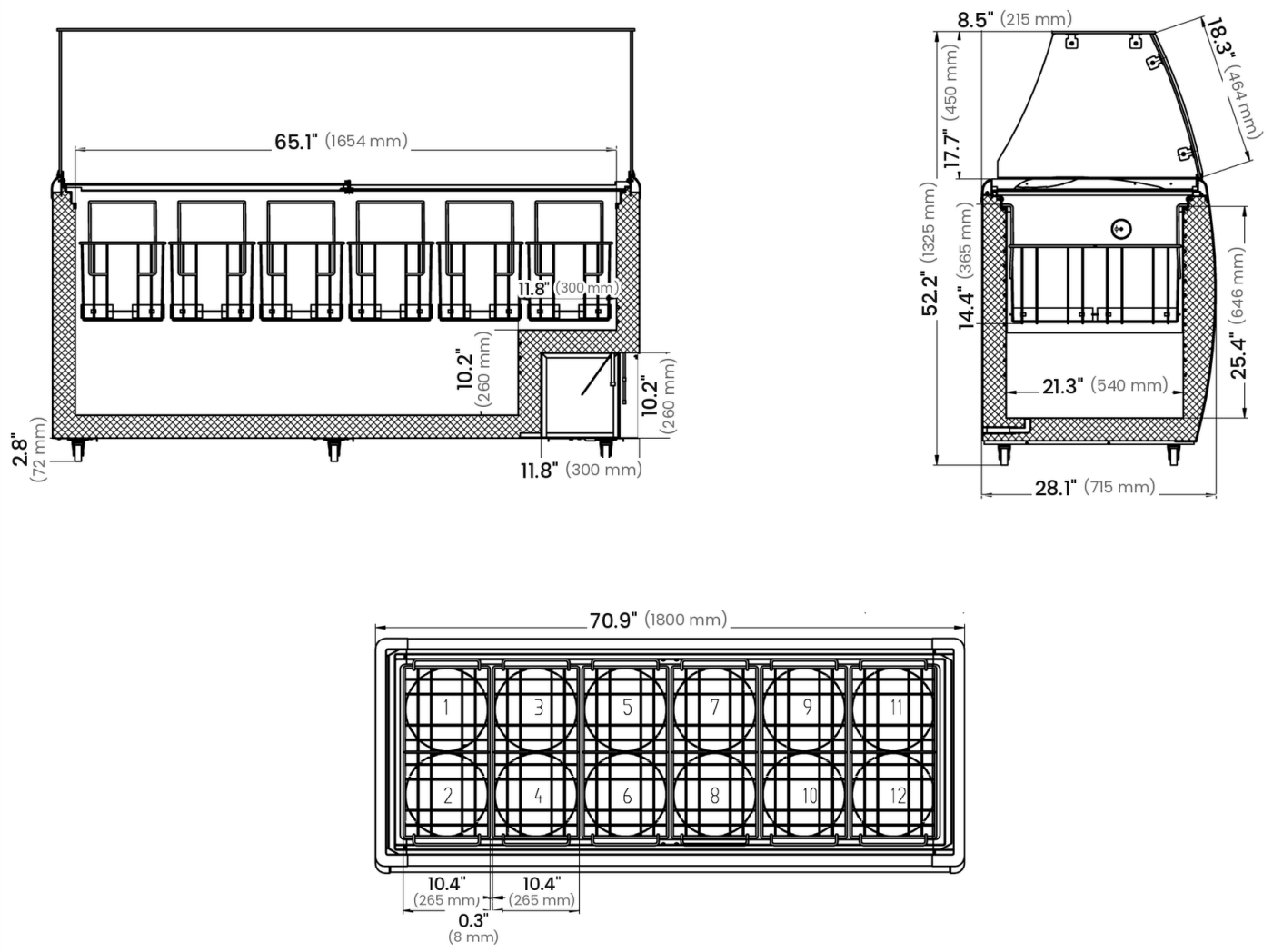

Specifications subject to change without notice.