Square Glass Floor Refrigerated Display Case

ITEM:	44382	44383	44384	44505
MODEL:	RS-CN-0271-S	RS-CN-0371-S	RS-CN-0471-S	RS-CN-0571-S



44382 - 36"



44383 - 48"



44384 - 60"

44505 - 72"



Attractively display food merchandise and increase impulse sales.

Omcan's Square Glass Floor Refrigerated Display Case offers a sleek and modern solution to showcase your products. With brilliant LED lighting positioned under each shelf, it enhances product visibility and draws customer attention. The digital temperature controller and display provides precise temperature management, keeping your items fresh.

The unit includes adjustable glass shelves for flexible merchandising, and the four-sided double glass design ensures clear visibility from every angle. It also features a ventilated cooling system for even airflow, an automatic defrost function for easy maintenance, and a durable stainless steel base for long-lasting performance.

FEATURES:

- Brilliant LED illumination under each shelf
- Digital temperature controller & display
- Adjustable glass shelves
- Four-sided double glass
- Automatic defrost
- Ventilated cooling system
- Stainless Steel base

Telephone: 1-800-465-0234 Fax: (905) 607-0234 Email: sales@omcan.com Website: www.omcan.com

Authorized Dealer

Made in China

TECHNICAL SPECIFICATION		
Features	36" Square Glass Floor Refrigerated Display	48" Square Glass Floor Refrigerated Display
Item	44382	44383
Model	RS-CN-0271-S	RS-CN-0371-S
Capacity	390 L / 13.77 cu. ft.	530 L / 18.71 cu. ft.
Power	600 W	620 W
Lamp Power	23 W	38 W
Temperature Range	0-12°C/ 32-54°F	
Electrical	110V / 60Hz / 1Ph	
Refrigerant	R290	
Plug Type	NEMA 5-15P	
Current	7.1 A	7.4 A
Shelf Dimensions	32" x 12.2"/ 817 x 311 mm 32" x 14.6"/ 817 x 371 mm	44" x 12.2" / 1117 x 311 mm 44" x 14.6" / 1117 x 371 mm
Interior Dimensions	34"x 23" x 33"/ 860 x 580 x 831 mm	46" x 23" x 33"/ 1160 x 580 x 831 mm
Net Dimensions (WDH)	36" x 26.8" x 55.5" / 925 x 680 x 1410 mm	48.2" x 26.8" x 55.5"/ 1225 x 680 x 1410 mm
Gross Dimensions (WDH)	39.4" x 30" x 58" / 1030 x 765 x 1615 mm	52" x 30" x 58" / 1330 x 765 x 1615 mm
Compressor Power	3/8 HP / 510 W	3/8 HP / 510 W
Net Weight	357.1 lbs / 162 kgs	429.9 lbs / 195 kgs
Gross Weight	451.9 lbs / 205 kgs	504.9 lbs/ 229 kgs

TECHNICAL SPECIFICATION		
Features	60" Square Glass Floor Refrigerated Display	72" Square Glass Floor Refrigerated Display
Item	44384	44505
Model	RS-CN-0471-S	RS-CN-0571-S
Capacity	670 L / 23.66 cu.ft.	810 L / 28.61 cu. ft.
Power	605 W	625 W
Lamp Power	50 W	60 W
Temperature Range	0-12°C/ 32-54°F	
Electrical	110V / 60Hz / 1Ph	
Refrigerant	R290	
Plug Type	NEMA 5-15P	
Current	7.1 A	7.7 A
Shelf Dimensions	55.5" x 12" / 1412 x 311 mm 55.5" x 14.6" / 1412 x 371 mm	33" x 12.2"/ 842 x 311 mm 33" x 14.6"/ 842 x 371 mm
Interior Dimensions	57" x 23" x 33"/ 1460 x 580 x 831 mm	33" x 14.6"/ 842 x 371 mm
Net Dimensions (WDH)	60" x 26.8" x 55.5" / 1525 x 680 x 1410 mm	72" x 26.8" x 55.5"/ 1825 x 680 x 1410 mm
Gross Dimensions (WDH)	63" x 29.3" x 57.9" / 1600 x 743 x 1470 mm	76" x 30" x 58" / 1930 x 765 x 1615 mm
Compressor Power	3/8 HP / 510 W	
Net Weight	505 lbs/ 229 kgs	540.1 lbs / 245 kgs
Gross Weight	556 lbs/ 252 kgs	639 lbs/ 290 kgs



Digital temperature controller & display

TECHNICAL DRAWING

Item 44382 Technical Drawings

Unit of Measurement: inch / mm

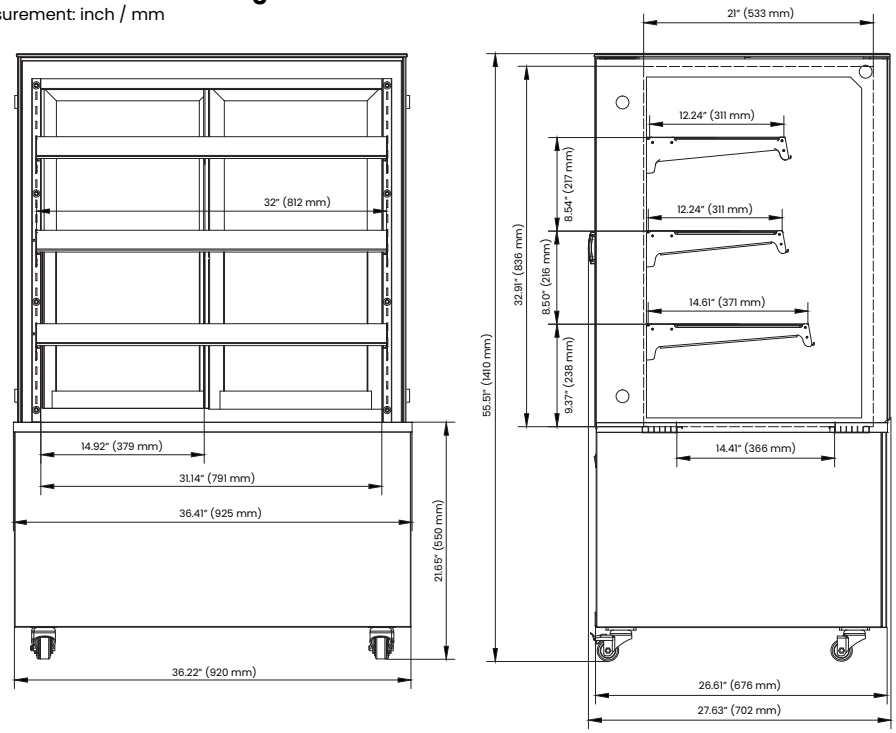

44382 - **36"**

Item 44383 Technical Drawings

Unit of Measurement: inch / mm

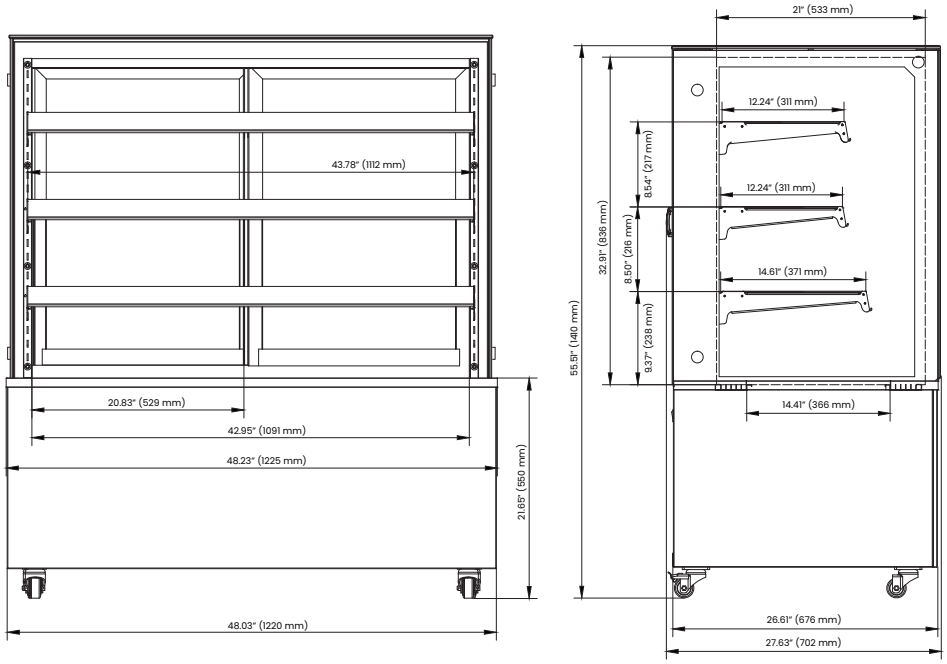

44383 - **48"**

TECHNICAL DRAWING

Item 44384 Technical Drawings

Unit of Measurement: inch / mm

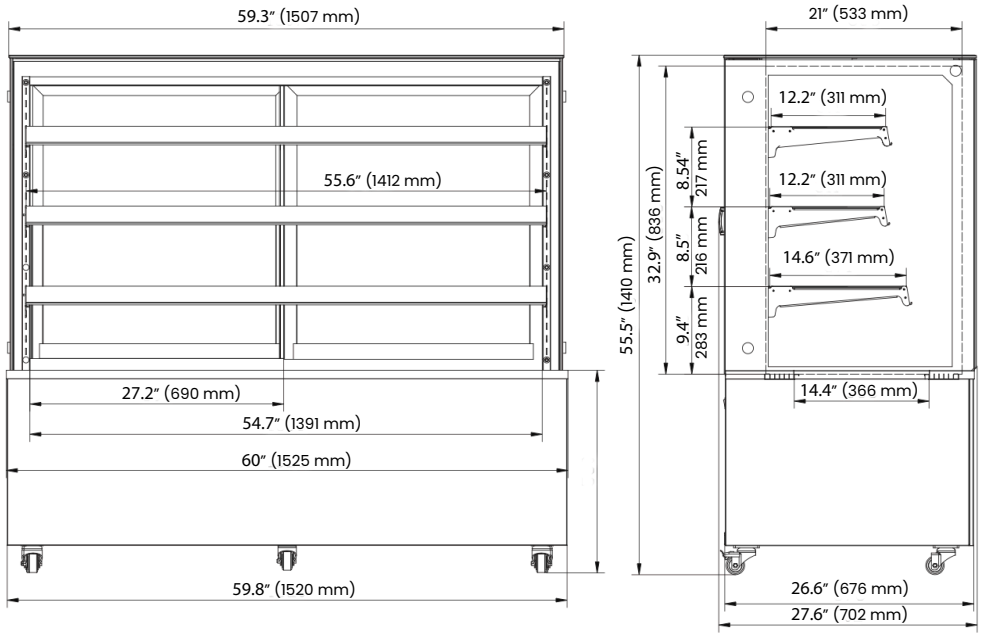

44384 - **60"**

Item 44505 Technical Drawings

Unit of Measurement: inch / mm

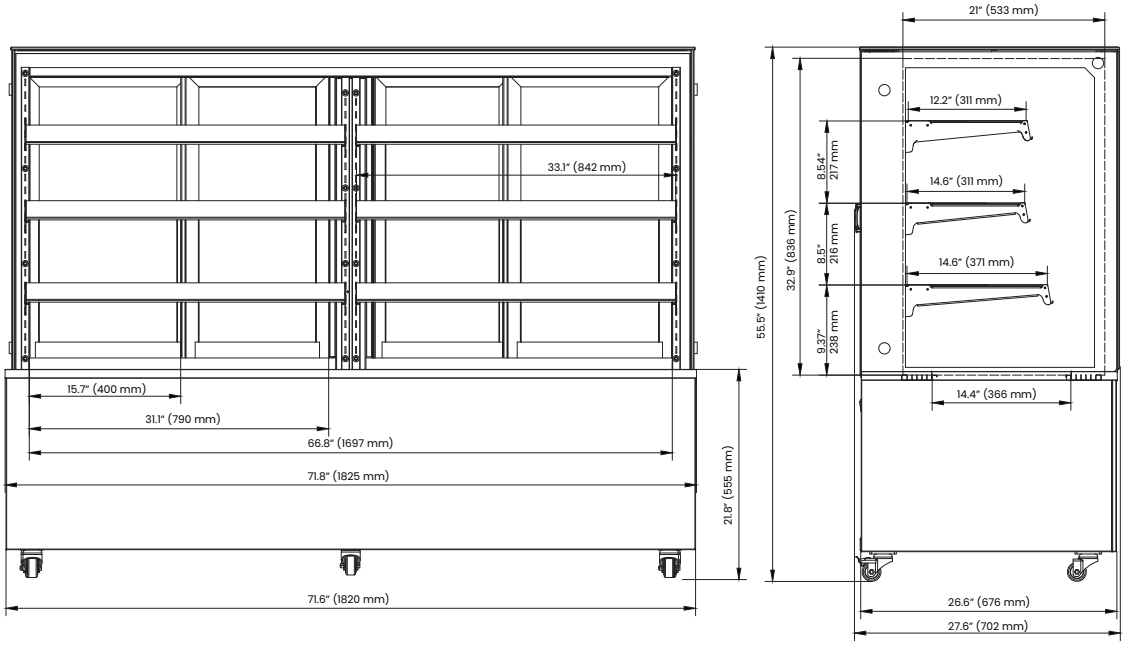

44505 - **72"**