AmericanChef

WTS-2448-BK



Width:	48″
Depth:	24″
Height:	37″
Internal Depth:	15.875″
Internal Width:	41.5″
Weight:	58.92 lbs
Shipping Size (Inch):	50″ L x 27″ W x 7″ H
Warranty	1 Year Parts & Labour

Work Tables with Backsplash

Features

- ☑ Premium 18 Gauge Type 304 stainless steel for durability.
- ☑ TIG welding for the top
- ☑ Entire top surface polished to a smooth satin finish
- ☑ Built to surpass industry reinforcement standards
- ☑ Galvanized legs and undershelf offer durability and cost-effectiveness
- ☑ Leg diameter is 1 5/8″
- ☑ Galvanized hat channels attached with structural adhesive and weld studs
- ☑ Gussets welded for hat section support
- ☑ Edges are hemmed for added strength and safety
- ☑ Worktables standard height is 34″ with an additional 4″ backsplash riser
- ☑ Reinforced leg sockets made from die-cast for added stability
- ☑ ABS bullet feet are adjustable to level on uneven floors

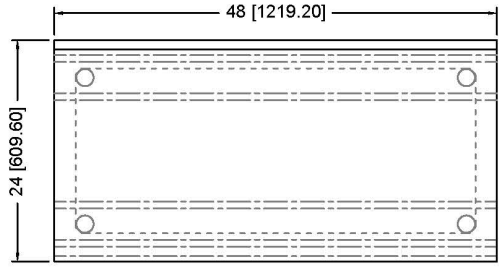

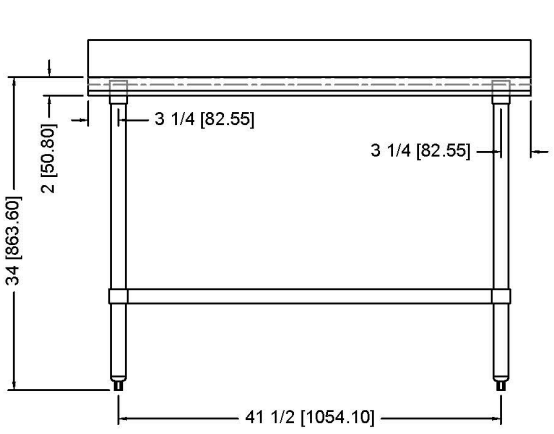

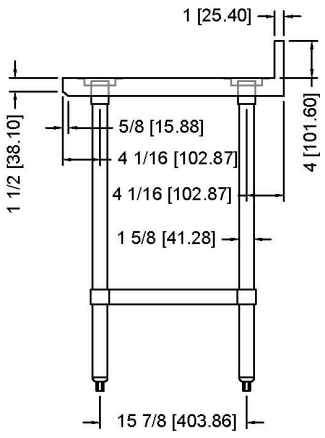

Specifcations are subject to change.

121 McLean Drive, Vancouver, British Columbia