DS2424-L



Size (Inch):	29.5″ x 74.5″ x 43″
Number of Bowls:	Three
Bowl Size:	24″
Drainboards:	None
Width:	74 ½″
Depth:	29 ½″
Height	43″
Drain Location:	Corner
Shipping Size (Inch):	76″ W x 30″ D x 30″ H
Weight:	106 lbs
Warranty	1 Year Parts & Labour

Double Compartment Sinks

Features

- ☑ Premium 18 Gauge Type 304 stainless steel for durability.
- ☑ Stamped drain boards and bottoms for optimal water flow.
- ☑ 14″ deep bowls with center or corner drain options.
- ☑ Pre-cut 8″ center holes for wall mount faucets.
- ☑ Gussets attached to reinforced plate for strength.
- ☑ Welded leg braces on stainless steel legs for strength.
- ☑ Corner drains with 1 7/8″ holes and a 12″ overflow pipe, including a drain basket.
- ☑ 36″ tall from floor to rim, 43″ to top of backsplash.
- ☑ Single piece with 5/8″ radius corners for easy cleaning.
- ☑ Polished welded joints for a sleek appearance.
- ☑ U shape leg braces included for maximum support.
- ☑ Entirely TIG welded for superior strength and finish.

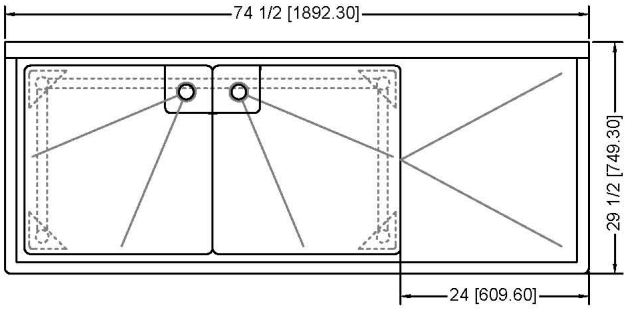

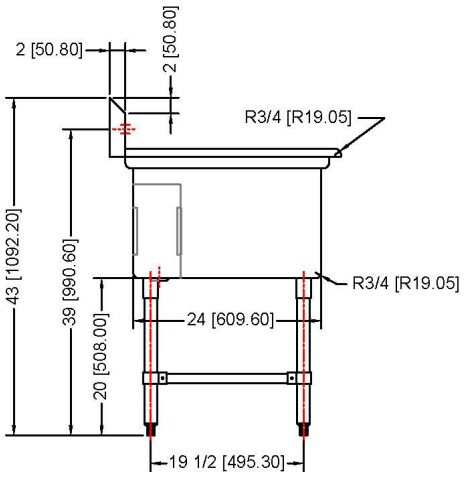

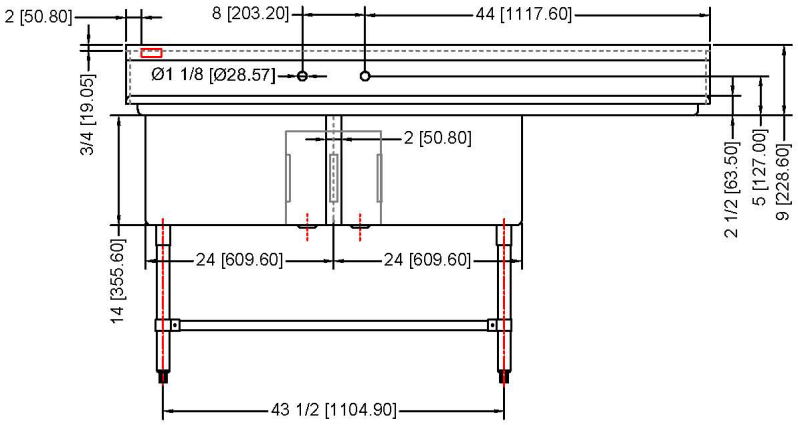

Specifcations are subject to change.
121 McLean Drive, Vancouver, British Columbia