# Instruction Manual

# Auto Breeze®

Model No. 3052-00-000




GOLD MEDAL® PRODUCTS CO.
10700 Medallion Drive, Cincinnati, Ohio 45241-4807 USA

© 2018 Gold Medal Products Co.

Part No. 110025

# SAFETY PRECAUTIONS



**⚠ DANGER**

Machine must be properly grounded to prevent electrical shock to personnel. Failure to do so could result in serious injury, or death.
DO NOT immerse any part of this equipment in water.
DO NOT use excessive water when cleaning.
Keep cord and plug off the ground and away from moisture.
Always unplug the equipment before cleaning or servicing.
Make sure all machine switches are in the OFF position before plugging the equipment into the receptacle.

008_051514



**⚠ DANGER**

Improper installation, adjustment, alteration, service, or maintenance can cause property damage, injury, or death. Any alterations to this equipment will void the warranty and may cause a dangerous condition. This appliance is not intended to be operated by means of an external timer or separate remote-control system. NEVER make alterations to this equipment. Read the Installation, Operating, and Maintenance Instructions thoroughly before installing, servicing, or operating this equipment.

014_020416



**⚠ WARNING**

Floss head rotates at high speeds. Operator MUST keep hands and face clear of the floss head to avoid injury. Operator must wear eye protection. Keep all spectators at a reasonable distance, and use a Floss Bubble for added customer protection.

015_062714



**⚠ WARNING**

Keep all foreign objects out of floss head. To avoid eye injury, DO NOT fill floss head with sugar while the head is on and rotating.

016_010914



**⚠ WARNING**

Burn Hazard. DO NOT touch spinner head. Allow to cool before cleaning or servicing. Avoid contact with molten sugar.

006_092414



**⚠ WARNING**

ALWAYS wear safety glasses when servicing this equipment.

010_010914

# SAFETY PRECAUTIONS (continued)



**⚠ WARNING**

No user serviceable parts inside. Refer servicing to qualified service personnel.

011_051514



**⚠ WARNING**

Read and understand operator's manual and all other safety instructions before using this equipment. To order copies of the operator's manual go to gmpopcorn.com or write to Gold Medal Products Co., 10700 Medallion Drive, Cincinnati, OH 45241 USA 1-(800)-543-0862

022_060215



**⚠ WARNING**

DO NOT allow direct contact of this equipment by the public when used in food service locations. Only personnel trained and experienced in the equipment operation may operate this equipment.
Carefully read all instructions before operation.

012_010914



**⚠ WARNING**

This machine is NOT to be operated by minors.

007_010914

**Note:** Improvements are always being made to Gold Medal's equipment. This information may not be the latest available for your purposes. It is critical that you call Gold Medal's Technical Service Department at 1-800-543-0862 for any questions about your machine operations, replacement parts, or any service questions. (Gold Medal Products Co. does not assume any liability for injury due to careless handling and/or reckless operation of this equipment.) General images may be used in manual for reference only.

# INSTALLATION INSTRUCTIONS

## Inspection of Shipment

After unpacking (reference unit Quick Start Guide), check thoroughly for any damage which may have occurred in transit. Claims should be filed immediately with the transportation company. The warranty does not cover damage that occurs in transit, or damage caused by abuse, or consequential damage due to the operation of this machine, since it is beyond our control (reference warranty in back of manual).

## Manual

Read and understand the operator's manual and all other safety instructions before using this equipment. To order copies of the operator's manual go to gmpopcorn.com or write to Gold Medal Products Co., 10700 Medallion Drive, Cincinnati, OH 45241 USA 1-(800)-543-0862.

## Model Description

**3052-00-000:** Auto Breeze cotton candy machine with aluminum floss pan.

## Items Included with this Unit




**Instruction Manual**




**Registration Warranty Card**




**Whirlgrip Floss Stabilizer**
(PN 3010)



**Aluminum Floss Pan**
(PN 42040)

## Setup for Use (General reference images shown)




**Step 1:** Set unit on a level surface. **DO NOT lift unit by spinner head.**

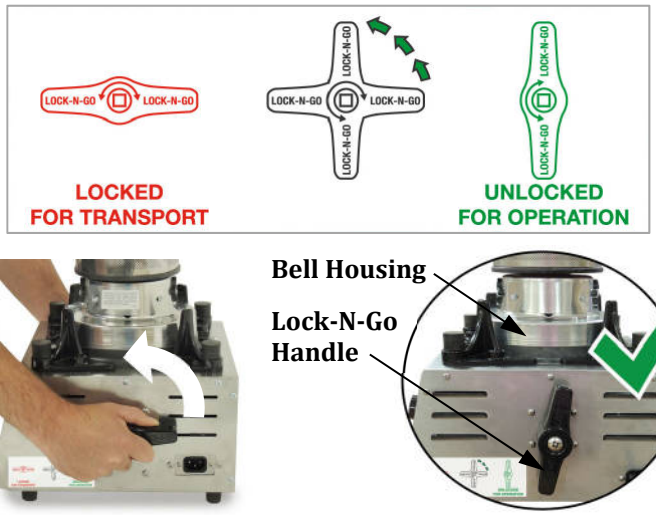


**Step 2:** Lock-N-Go® handles are used for transport. Rotate both handles to a vertical, UNLOCKED, position for use. This allows the bell housing to "float" freely on the springs during operation. **DO NOT operate with handles in the transport position.**



**Step 3:** Place floss pan on unit.



**Step 5:** Install Floss Stabilizer (see instructions on next page).

**Unit should be cleaned prior to use (reference Care and Cleaning section of this manual).**

# Whirlgrip Floss Stabilizer

## Installation Instructions

Unit must be OFF, and cool to install Floss Stabilizer. Place Floss Pan on unit and install Whirl Grip Floss Stabilizer (Item No. 3010) as shown below. Kit includes: Floss Stabilizer/screening (P/N 43032), and (6) Whirlgrip Clips (P/N 77470). Clips are designed to provide air space between screening and floss pan.

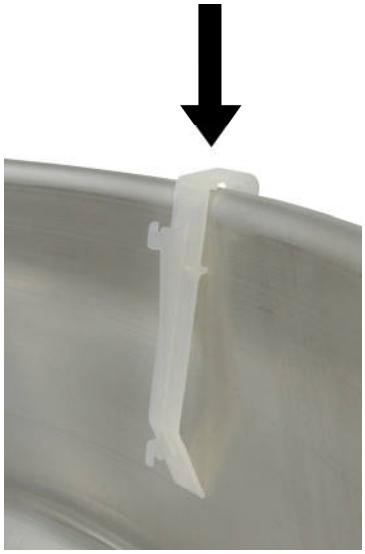

**Step 1:** Place Whirl Clips over rim of pan with hooks facing inside.

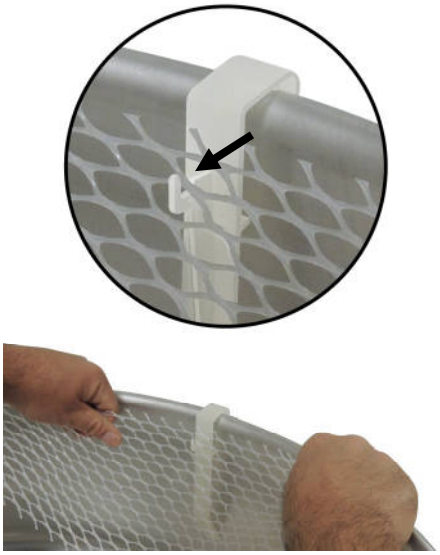

**Step 2:** Hang Stabilizer on top, up facing hook. Screening should be about flush with top of pan.

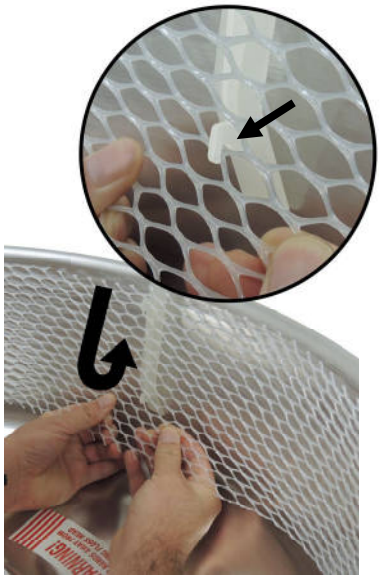

**Step 3:** Gently pull screening down and attach to bottom, down facing hook.

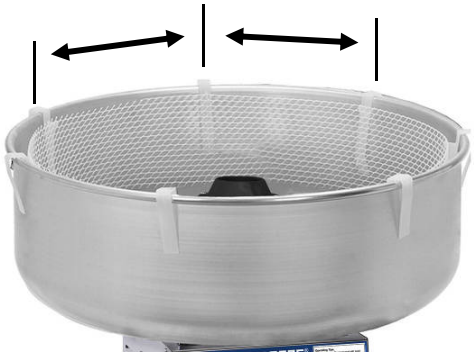

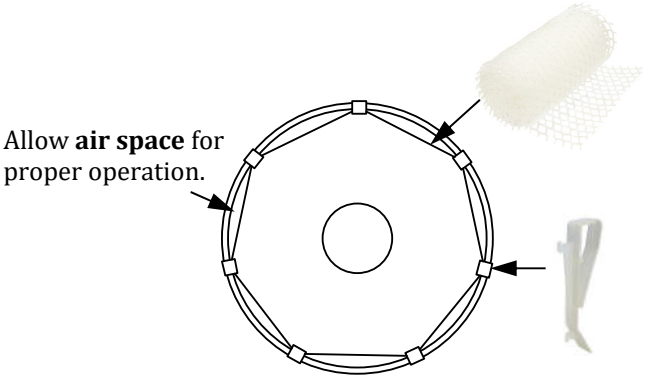


**Top View of Floss Pan**

**Step 4:** Repeat for all clips keeping equal spacing around pan (number of clips varies by model). Allow air space between pan and screening for proper operation.

## Electrical Requirements

The following power supply must be provided:

**3052-00-000:** 120 V~, 1440 W, 60 Hz



**⚠ DANGER**

Machine must be properly grounded to prevent electrical shock to personnel. Failure to do so could result in serious injury, or death.
DO NOT immerse any part of this equipment in water.
DO NOT use excessive water when cleaning.
Keep cord and plug off the ground and away from moisture.
Always unplug the equipment before cleaning or servicing.
Make sure all machine switches are in the OFF position before plugging the equipment into the receptacle.

008_051514

A certified electrician must furnish sufficient power for proper machine operation and install any supplied receptacle. We recommend this equipment be on a dedicated and protected circuit. Failure to wire properly will void the warranty and may result in damage to the machine. It is Gold Medal Products Co.'s recommendation that this machine be plugged directly into a wall outlet. The use of extension cords is not recommended due to safety concerns, and may cause sacrificed and/or reduced performance. Make sure cord is located to prevent a trip hazard or unit upset.

## Before You Plug In Machine

1. Make sure all machine switches are OFF before plugging equipment into receptacle.
2. Make sure wall outlet can accept the grounded plugs (where applicable) on the power supply cord.
3. The wall outlet must have the proper polarity. If in doubt, have a competent electrician inspect the outlet and correct if necessary.
4. **DO NOT** use a grounded to un-grounded receptacle adapter (where applicable).
5. Install unit in a level position.



**⚠ CAUTION**

If the supply cord is damaged, it must be replaced by Gold Medal Products Co., its service agent or similarly qualified persons in order to avoid a hazard.

039_080614

# OPERATING INSTRUCTIONS

## Controls and Their Functions (3052 Auto Breeze)

**POWER SWITCH**

Two position, ON/OFF lighted rocker switch - supplies power to the Candy Switch. The green switch light ON indicates there is power to the unit.

**Immediate Power Off:** To bypass the cooling cycle and immediately remove power from the machine, turn the Power Switch OFF.

**CANDY SWITCH**

Two position, "White" rocker switch - turns the motor and heating element ON/OFF.

When turned OFF, the cooling cycle will start. After one (1) minute the cooling cycle completes, and the spinner head will stop rotating. Cooling is necessary to keep carbon from forming in the spinner head.

**AUTO COOLING INDICATOR LIGHT**

When lit, this amber light indicates the unit is in the cooling cycle. During the cooling cycle the spinner head will remain spinning.

If the Auto Cooling Light is blinking during machine operation, it indicates there is a low voltage supply to the machine (less than 105 VAC). The machine may not operate properly (see Troubleshooting section of this manual).



# Sugar for Your Candy

## Ready to Use Flossugar

Our ready to use Flossugar is the preferred sugar for your new cotton candy machine; however 100% pure cane or beet sugar will do just fine. Our Flossugar gives you good rich colors, and great flavors, too. It is packed in handy half-gallon sealed cartons, with an E-Z pour spout for filling your machine. Flossugar comes in many flavors, and you can easily change flavors for greatest variety, and best sales.

## Mix Your Own

If you want to mix your own, use our Flossine®, and please follow our directions. If you want a deeper color, slightly dampen the mixed sugar. Use a tablespoon of water per five pounds of sugar, sprinkle water over sugar, and mix well. **DO NOT USE EXCESS COLOR!** Too much color will ruin the element on your machine and could create a bitter taste to the candy. There is a limit as to how dark you can make cotton candy. That's because cotton candy is 98% air, and we cannot color the air.

## Sugar Considerations

Today 99% of the sugar manufactured is extra fine granulated, which does have some small particles which can slip thru the ribbons without being melted. If this becomes objectionable, you can seek out medium coarse or sanding sugars. The larger crystal size will require a little more heat to melt.

Read the label on the bag of sugar, today we see some free flowing sugars for restaurants. Free flowing sugars contain cornstarch which will burn onto your element/band clogging them rapidly. We have also seen some off-brand sugars that are a blend of sugar and dextrose or corn syrup. This product makes very poor cotton candy. Please make sure you get good sugar for your cotton candy machine.

# Machine Operation

## Floss Machine Operation (3052 Auto Breeze)



**⚠ WARNING**

Floss head rotates at high speeds. Operator MUST keep hands and face clear of the floss head to avoid injury. Operator must wear eye protection. Keep all spectators at a reasonable distance, and use a Floss Bubble for added customer protection.

015_062714

1. Follow the guidelines described in the Electrical Requirements Section for supplying power to machine.
2. With the Candy Switch OFF, turn the Power Switch ON. The spinner head will not start to rotate.
3. With the spinner head stopped, pour flossugar into the spinner head. Always fill it 90% full with sugar. This 90% level is necessary to obtain a balanced condition in the floss head. **DO NOT OVERFILL!**

   **IMPORTANT: NEVER add sugar when motor is running.**
4. Turn the Candy Switch ON. The spinner head will rotate and heat. After about 30 seconds the machine will start to make cotton candy.
5. When the spinner head needs to be refilled with sugar, or to stop making cotton candy, turn the Candy Switch OFF. The cooling cycle will start. After 1 minute the cooling cycle completes, and the spinner head will stop rotating. When the spinner head is stopped, refill with flossugar. Turn the Candy Switch ON, and continue to make cotton candy.

   **Note:** During the cooling cycle the spinner head will remain spinning. Cooling is necessary to keep carbon from forming in the spinner head. DO NOT use the Power Switch for normal operation of the machine. This will bypass the cooling cycle.

   **IMPORTANT:** Failure to cool down the floss head could result in leaving melted sugar in the floss head. If the motor is restarted, this melted sugar will exit the floss head and could cause burns.

   In addition, sugar left in the floss head may smoke or cause carbon build up.

   **Immediate Power Off:** To bypass the cooling cycle and immediately remove power from the machine, turn the Power Switch OFF.

When completing operation for the day (or any prolonged period), follow the instructions in the Shutdown Procedure/Cleaning and Care section of this manual.

# Making Floss

Pick a cone, if it sticks in the stack of cones, twist it off the stack.

**⚠ CAUTION**

Keep hands away from spinning head!

031_021914

Hold an inch or two of the pointed end of a cone between two fingers and a thumb. With a light flicking action, roll cone in the web of floss building up in the pan. Lift the cone up with the ring of floss attached and rotate the cone to wrap the floss**. DO NOT** roll floss while the cone is inside the pan. This will pack the floss too tightly. See steps 1 thru 8 shown below.

If the floss fails to stick to the cone, pass the cone near the spinner head to pick up a “starter” of melted sugar. Lift the cone out of the pan and wrap the floss with a "figure eight" movement of the hand. This leaves giant pockets and makes the final product appear larger. Make sure room humidity is not too high, or product will be "heavy".

**1. Grip cone as shown.**

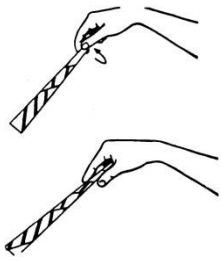

**2. Break into web of floss with the cone.**



**3. Wind the sugar onto the cone.**



**4. Lift web of floss from the pan and roll onto the cone.**

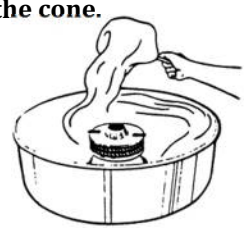

**5.**



**6.**

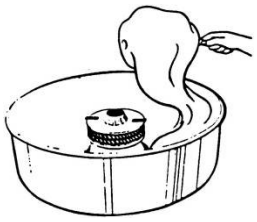

**7.**

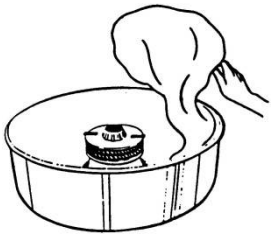

**8.**

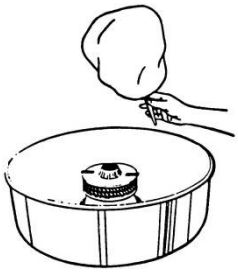

**⚠ WARNING**

- **DO NOT PUT HANDS OR OBJECTS IN ROTATING SPINNER HEAD.**
- **DO NOT FILL SPINNER HEAD WITH SUGAR WHILE IT IS ROTATING.**
- **WEAR EYE PROTECTION.**
- **DO NOT PUT HANDS NEAR ROTATING SPINNER HEAD.**
- **USE FLOSS CONE TO COLLECT COTTON CANDY.**

032_021914

# Floater Adjustments

In operation, the floss will collect on the FLOSS STABILIZER. If the floss collects “low” on the stabilizer, twist the front (leading) edge of the leather floaters down. You get more lift and the floss will collect higher.

Form leather floaters as shown below. This creates a lifting action to float the floss higher on the wall of the floss pan.

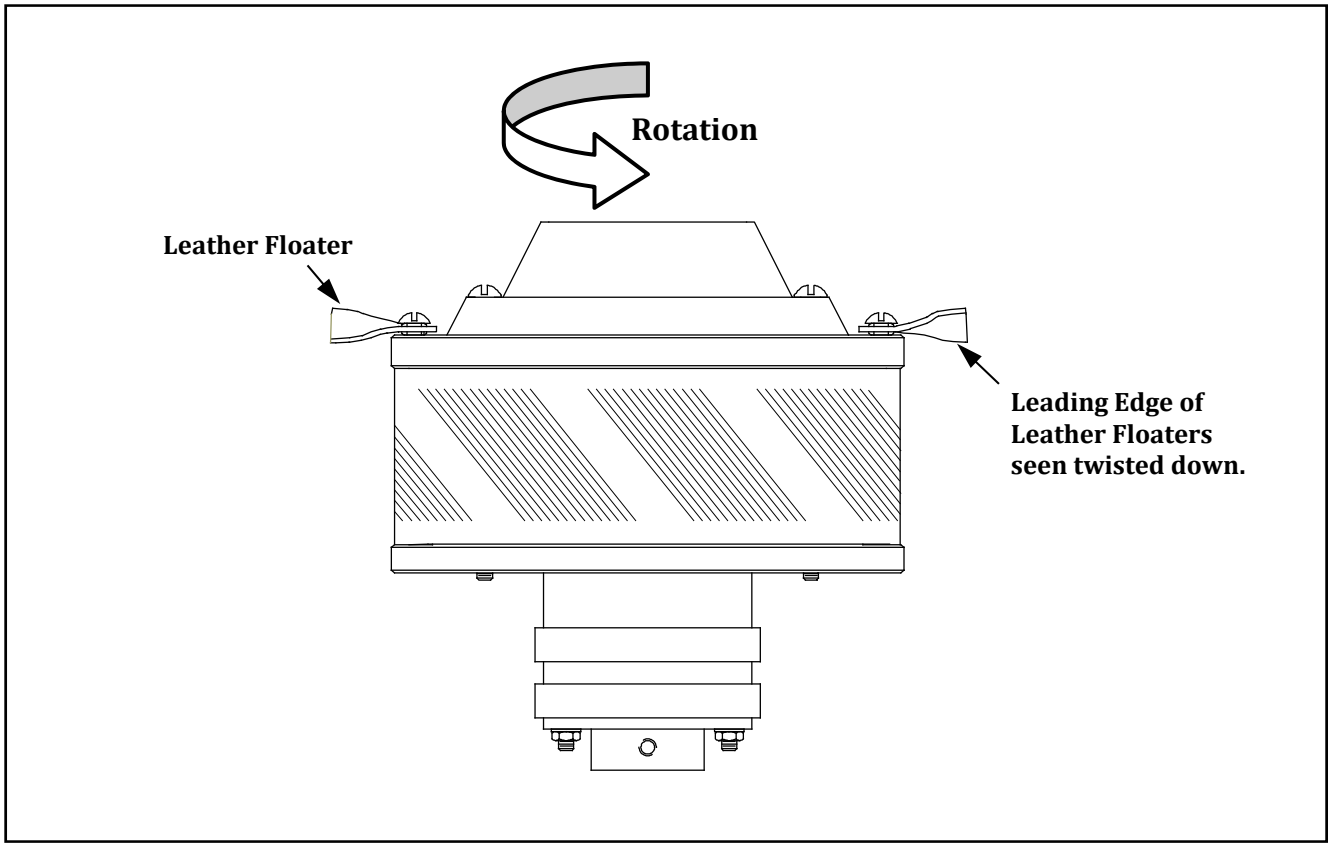

# Shut Down Procedure/ Care and Cleaning

## Shut Down Procedure (3052 Auto Breeze)

1. When completing operation for the day (or any prolonged period), run the floss head completely empty of sugar.
2. Turn the Candy Switch OFF. The cooling cycle will start. When the cooling cycle completes, the spinner head will stop rotating.
3. When the spinner head is stopped, turn the Power Switch OFF.
4. **NEVER put water in the floss head.**

## Care and Cleaning



**DANGER**

Machine must be properly grounded to prevent electrical shock to personnel. **DO NOT immerse in water.** DO NOT clean appliance with a water jet. Always unplug the equipment before cleaning or servicing.

025_111616



**WARNING**

Burn Hazard. DO NOT touch spinner head. Allow to cool before cleaning or servicing. Avoid contact with molten sugar.

006_092414

Good sanitation practice demands that all food preparation equipment be cleaned regularly (only use non-toxic, food grade cleaners). A clean looking, well-kept machine is one of the best ways of advertising your product.

Follow the directions below to clean and sanitize the unit each day after use.

1. Unplug the machine and wait for the floss head to cool down to room temperature.
2. Make sure to clean all pans/accessories in order to sanitize them before each use.
3. Wipe all surfaces with a clean, damp cloth.
4. Wipe the stainless steel parts with a clean cloth and cleaner designed for stainless steel, such as Gold Medal Watchdog Stainless Cleaner (Item No. 2088).

   **DO NOT** use oven cleaners or abrasive materials as they will damage parts of the machine.

# Floss Band and Element

## Disassembly and Removal of Floss Band

1. Unplug the machine from the power source and allow floss head to cool completely.
2. Remove all sugar from the head of the machine before disassembling. If needed, carefully turn the machine on its side and shake the sugar out.
3. Remove the four spinner cap retainer screws and spinner cap. In some cases, the sugar has caused the cap and band to stick together. Applying gentle pressure with the heel of the hand should free the parts for removal.
4. Remove the nylon acorn nut, lock nut, and terminal guard.
5. Remove the retaining screws which fasten the element lead wires to the terminals (use a 1/4" (9.5mm) nut driver); then remove the band and element. (See next page for reconnecting element leads.)
6. If there is excessive sugar build-up, run hot water over band and element until the sugar dissolves (be careful to keep element leads dry). When the sugar has been removed, allow the band and element to air dry overnight.

**Note:** For models with separate heat and motor switches, the best way to dry the floss head after reassembly is to spin it dry for 10 minutes **WITHOUT HEAT** (use motor switch only).

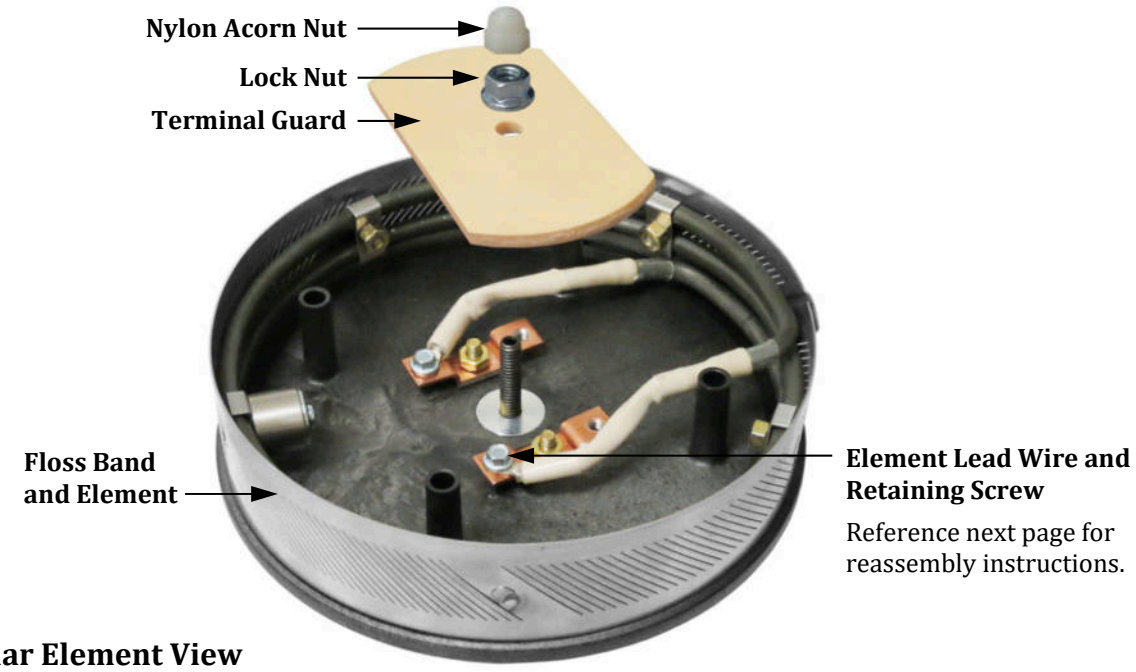


**Tubular Element View**

## Reassembly of Floss Band

1. The band is marked to show correct orientation for installation (see image below).
2. Always attach one element lead to the far connection on each terminal assembly (see image below).
3. Reassemble terminal guard, lock nut, and nylon acorn nut.
4. When reinstalling the spinner cap, **DO NOT OVERTIGHTEN SCREWS**. Initially snug down each screw evenly; be careful not to over apply pressure on any single point. Once snug, tighten all screws evenly to secure spinner cap to floss head.

**Band is marked to show correct orientation.**

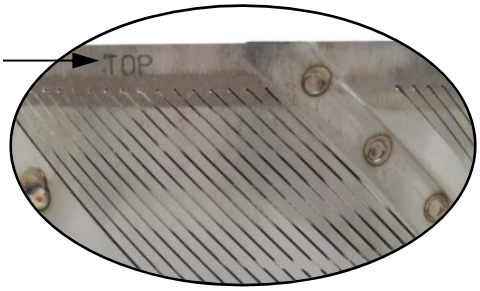


**Floss Band Orientation**

**Element Lead Wire and Retaining Screw**
Models 3038, 3052, and 3042 - ALWAYS connect Element Leads on the far side of each terminal assembly as shown in example below.

**Terminal Assemblies**

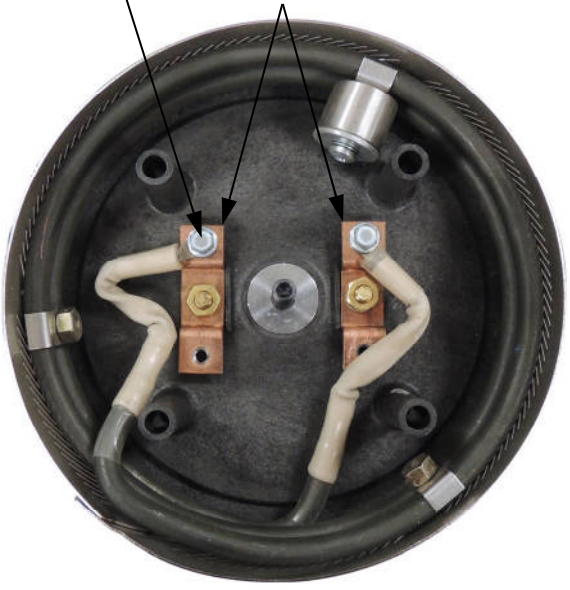

**CORRECT**

Connect **ONE** element lead to **EACH** terminal assembly.

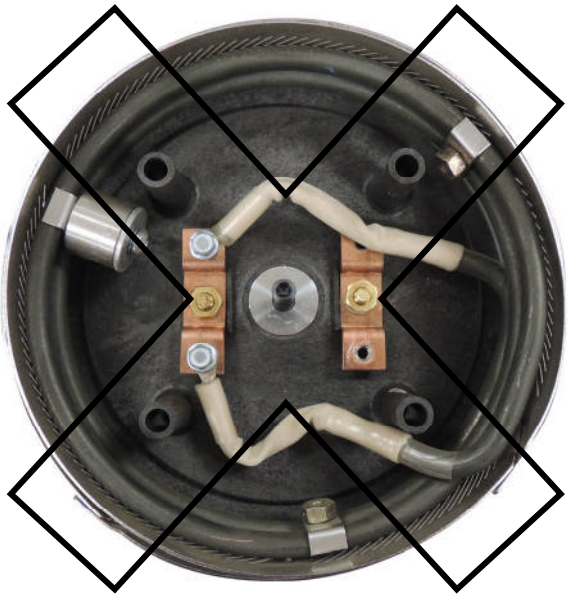

**INCORRECT**

**DO NOT** connect both element leads to the same terminal assembly.

# Troubleshooting

| Issue | Possible Cause | Solution |
|---|---|---|
| **Low Production** | A. Excessive carbon on the element. | A. Follow the instructions for removing and cleaning band and element (see Floss Band and Element section). |
| | B. Low line voltage. | B. If the Auto Cooling Light is blinking during machine operation, it indicates there is low wall line voltage to the machine (less than 105 VAC). A primary reason for low production and poor equipment performance is low line voltage. Have a qualified electrician check the wall line voltage (where the machine is plugged in), and add new lines for all the various equipment plugged into the electric circuit if there is not enough current for the requirement listed on the equipment nameplate.<br><br>The use of extension cords is not recommended due to safety concerns, and may cause sacrificed and/or reduced performance. If the use of an extension cord cannot be avoided then be sure it is no longer than 10 to 12 ft., and is at least 14 AWG wire. |
| | C. Foreign objects in the spinner head. | C. Foreign objects in the head assembly can short out an element or cause an out-of-balance condition. |
| **Excessive Smoke** | A. Bypassing the cooling cycle. | A. Bypassing the cooling cycle will cause excessive smoke and melting sugar. This can cause carbon buildup. See Floss Band and Element section of this manual for cleaning the band and element. |
| | B. Product mixture. | B. Check the product mixture being used. For best results, use nothing with a cornstarch base. |
| | C. Excessive sugar buildup. | C. Check the band for excessive sugar buildup and remove if needed as described in the Floss Band and Element section of this manual. |
| **Excessive Vibration** | A. Packing material not removed. | A. If the equipment is new, check that all packing materials were removed from the machine. |
| | B. Lock-N-Go Handles not in operating position. | B. Verify that the Lock-N-Go Handles have been rotated into the operating position. |
| | C. Low on sugar. | C. Refill the floss head; this will normally eliminate excessive vibration. When adding sugar to the floss head, always fill it 90% full to obtain a balanced condition in the head and eliminate vibration. **Do not add sugar with the motor running!** |

| Issue | Possible Cause | Solution |
|---|---|---|
| | D. Foreign objects or sugar lumps. | D. Run the sugar completely out, then check for foreign objects or sugar lumps in the head assembly. |
| | E. Stretched or uneven suspension springs. | E. If the suspension springs are stretched or uneven this can cause unwanted vibrations. Have Qualified Service Personnel replace if needed. |
| **Lock-N-Go Handles are Hard to Rotate** | A. Clamping Cam friction. | A. If handles are hard to move, Qualified Service Personnel may need to apply Petro Gel (Gold Medal Item No. 1110), or a food safe lubricant, to the top surface of the Clamping Cam to reduce friction where the cam contacts the bell housing. |

# MAINTENANCE INSTRUCTIONS



**⚠ DANGER**

Machine must be properly grounded to prevent electrical shock to personnel. Failure to do so could result in serious injury, or death.
DO NOT immerse any part of this equipment in water.
DO NOT use excessive water when cleaning.
Keep cord and plug off the ground and away from moisture.
Always unplug the equipment before cleaning or servicing.
Make sure all machine switches are in the OFF position before plugging the equipment into the receptacle.

008_051514



**⚠ DANGER**

Improper installation, adjustment, alteration, service, or maintenance can cause property damage, injury, or death. Any alterations to this equipment will void the warranty and may cause a dangerous condition. This appliance is not intended to be operated by means of an external timer or separate remote-control system. NEVER make alterations to this equipment. Read the Installation, Operating, and Maintenance Instructions thoroughly before installing, servicing, or operating this equipment.

014_020416



**⚠ WARNING**

No user serviceable parts inside. Refer servicing to qualified service personnel.

011_051514



**⚠ CAUTION**

THE FOLLOWING SECTIONS OF THIS MANUAL ARE INTENDED ONLY FOR QUALIFIED SERVICE PERSONNEL WHO ARE FAMILIAR WITH ELECTRICAL EQUIPMENT. THESE ARE NOT INTENDED FOR THE OPERATOR.

027_010914

# How to Check a Triac

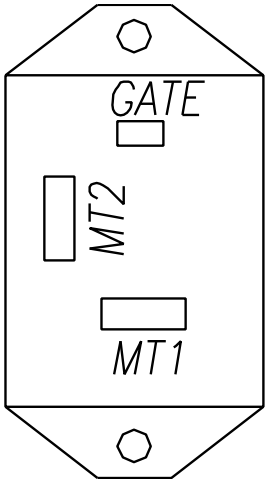


**Triac - Top View**

1. Set the Multimeter for ohms or continuity.
2. Disconnect all machine leads from the Triac.
3. Connect the positive ohmmeter lead to MT2 and the negative lead to MT1. The ohmmeter should indicate no continuity (OL) through the Triac.
4. Using a separate jumper lead, connect the gate of the Triac to MT2. The ohmmeter should indicate continuity (less than 100 ohms).
5. Reconnect the Triac so MT1 is connected to the positive ohmmeter lead and the negative lead to MT2. The ohmmeter should indicate no continuity (OL) through the Triac.
6. Using a separate jumper lead, connect the gate of the Triac to MT2. The ohmmeter should indicate continuity (less than 100 ohms).

# ORDERING SPARE PARTS

1. Identify the needed part by checking it against the photos, illustrations, and/or parts list. (General images may be used in manual for reference only.)
2. Use only approved replacement parts when servicing this unit.
3. When ordering, please include part number, part name, and quantity needed.
4. Please include your model number, serial number, and date of manufacture (located on the machine nameplate/data plate) with your order.
5. Address all parts orders to:

Parts Department
Gold Medal Products Co.
10700 Medallion Drive
Cincinnati, Ohio 45241-4807

Or, place orders by phone or online:

Phone: (800) 543-0862
(513) 769-7676
Fax: (800) 542-1496
(513) 769-8500
E-mail: info@gmpopcorn.com
Web Page: gmpopcorn.com

# Cabinet Exterior and Lock-N-Go Handle Assembly

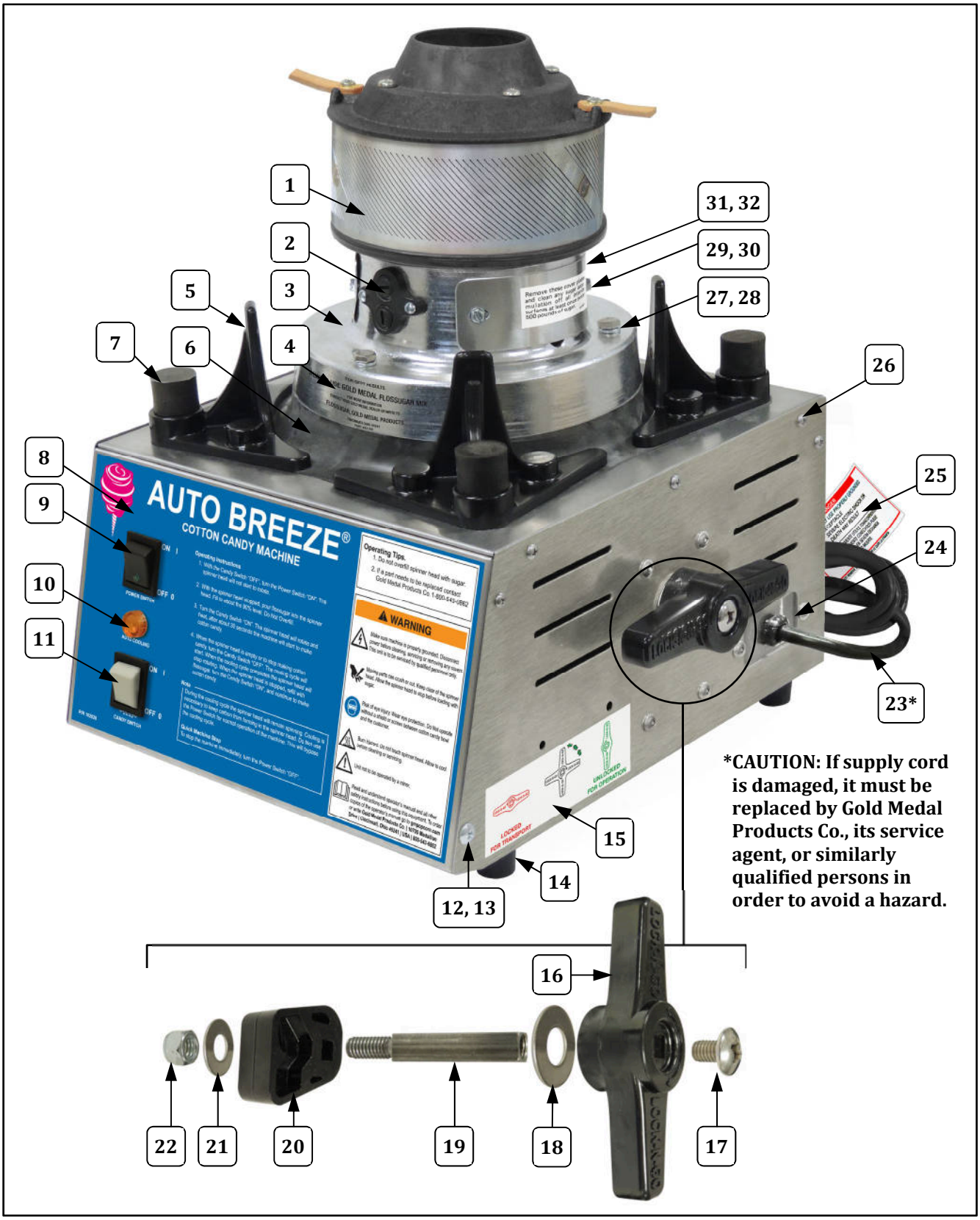


***CAUTION: If supply cord is damaged, it must be replaced by Gold Medal Products Co., its service agent, or similarly qualified persons in order to avoid a hazard.**

# Cabinet Exterior and Lock-N-Go Handle Assembly – Parts List

| Item | Part Description | Part Number 3052-00-000 |
|---|---|---|
| 1 | SPINNER HEAD, TUBULAR 5IN HEAD (Complete Assembly) See Spinner Head Assembly section for individual parts breakdown. | 55139 |
| 2 | BRUSH HOLDER ASSY (includes Brushes, Caps and Holders) See Brush Assembly Breakdown section for individual parts breakdown. | 42382W |
| 3 | BELL HOUSING, DUAL BRUSH | 42190 |
| 4 | LABEL,FLOSS ADVERTISEMENT | 42159 |
| 5 | BOWL, SEAL RETAINER | 56561 |
| 6 | BELL HOUSING SEAL | 56571 |
| 7 | THREADED BUMPER,1/4-20 | 102017 |
| 8 | NAME,INSTRUCTION OVERLAY | 102028 |
| 9 | SWITCH, LIGHTED ROCKER GR | 42798 |
| 10 | PILOT LIGHT, AMBER 125V | 55039 |
| 11 | SWITCH, ROCKER DPDT | 48615 |
| 12 | 10-24 X 1/2 PH TRUSS M/S | 42826 |
| 13 | HEX NUT #10-24 ESLOK | 74691 |
| 14 | RUBBER FOOT 3/4IN HIGH (4 required) | 47155 |
| 15 | HANDLE UNLOCK DECAL | 102253 |
| 16 | LOCK N GO HANDLE, NEW CAB. | 56563 |
| 17 | 5/16-18 X 1/2 PH TR M/S | 12183 |
| 18 | WASHER SS .5 ID X 1.10 OD | 48428 |
| 19 | CLAMPING SHAFT, LOCK N GO | 56565 |
| 20 | CLAMPING CAM | 42460 |
| 21 | 5/16 FLAT WASHER ZINC PLT | 74134 |
| 22 | HEX NUT 5/16-18 ESLOK | 12001 |
| 23* | POWER SUPPLY CORD | 22038 |
| 24 | STRAIN RELIEF SR-6P3-4 | 76026 |
| 25 | WARNING LABEL CORD | 68720 |
| 26 | 8-32 X 3/8 PHIL PAN HEAD | 87515 |
| 27 | 1/4-20 X 3/4 GRADE 5 BOLT (w/Lock Washer) | 74520 |
| 28 | TINNERMAN NUT 1/4-20 | 42125 |
| 29 | 8-32 X 3/8 SLT. HWH M/S | 42044 |
| 30 | #8-32 TINNERMAN FASTENER | 47299 |
| 31 | INSPECTION BRUSH COVER | 42381 |
| 32 | LABEL,CLEAN EVERY 500 LBS | 42002 |

# 5” Spinner Head (Model No. 55139) – Parts Breakdown

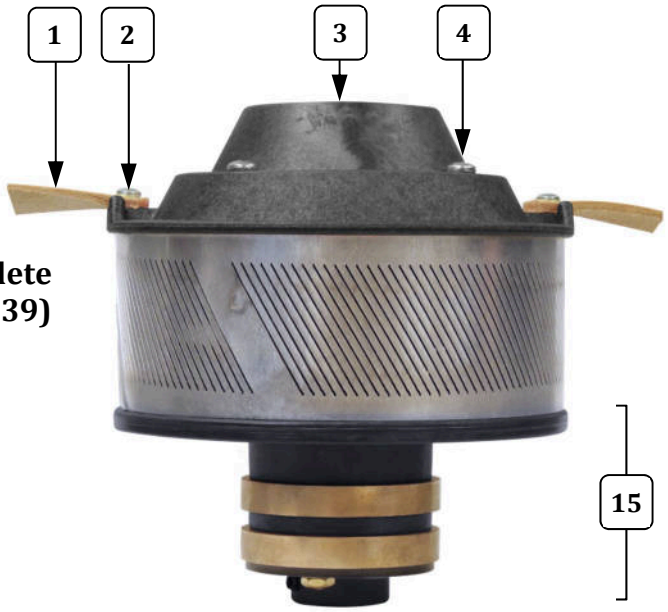


**Spinner Head Complete (Model 55139)**

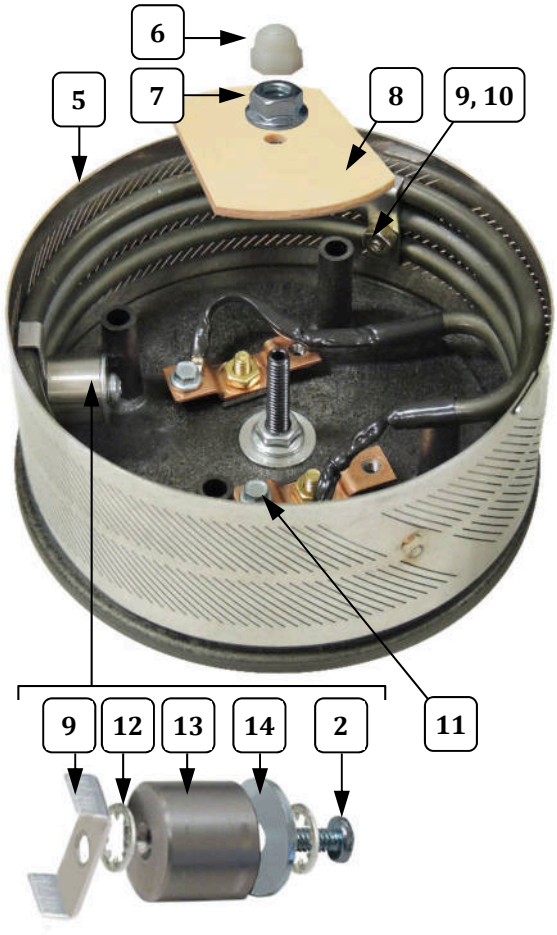


**Floss Head – Band Interior View**

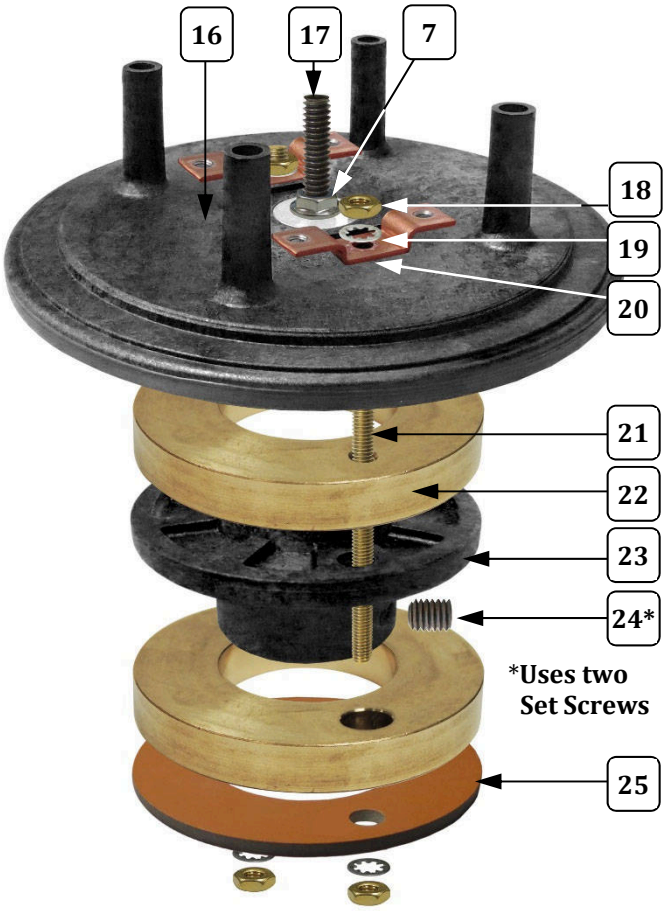


*Uses two Set Screws

**Spinner Head Bottom**

# 5” Spinner Head (Model No. 55139) – Parts List

| Item | Part Description | Part Number |
|---|---|---|
| | | 55139 |
| 1 | LEATHER FLOATER | 20010 |
| 2 | SCREW 8-32 X 5/16 PH PAN MS | 89247 |
| 3 | HIGH CAPACITY SPINNER CAP | 43166 |
| 4 | 10-24 X 3 1/4 PHIL PAN MS | 43603 |
| 5 | BAND ASSY, SUPER BREEZE (includes element) | 48784 |
| 6 | 1/4 – 20 NYLON ACORN NUT | 48041 |
| 7 | 1/4 – 20 SERRATED LOCK NUT | 46311 |
| 8 | PHENOLIC TERMINAL GUARD | 42162 |
| 9 | FLOSS ELEMENT BRACKET | 55118 |
| 10 | 8-32 LOCKNUT, REVERSIBLE | 48767 |
| 11 | 8-32 X 1/4 HX HD WHIZ LOCK | 42045 |
| 12 | #8 INTERNAL TOOTH L/W 410SS | 12132 |
| 13 | COUNTER WEIGHT | 55006 |
| 14 | .188ID FLATWASHER | 77052 |
| 15 | SPINNER HEAD BOTTOM (Complete assembly includes 2 element lead screws, Terminal Guard, Nylon Nut, Lock Nut, and items listed below.) | 42284 |
| 16 | UPPER SPINNER HEAD | 42437 |
| 17 | 1/4-20 X 2-3/4 SET SCREW | 42413 |
| 18 | HEX NUT #10-32 BRASS | 42301 |
| 19 | #10 INTERNAL TOOTH WASHER | 12573 |
| 20 | TERMINAL ASSEMBLY | 42305 |
| 21 | SLIP RING STUD | 42127 |
| 22 | SLIP RING MACHINED | 42126HD |
| 23 | LOWER SPINNER HEAD 1/2 | 42281 |
| 24 | SET SCREW 1/4-20 X 3/8 (2 required for the Lower Spinner Head) | 74125 |
| 25 | BOTTOM PHENOLIC WASHER | 20054 |

# Bell Housing Interior – Brush Assembly

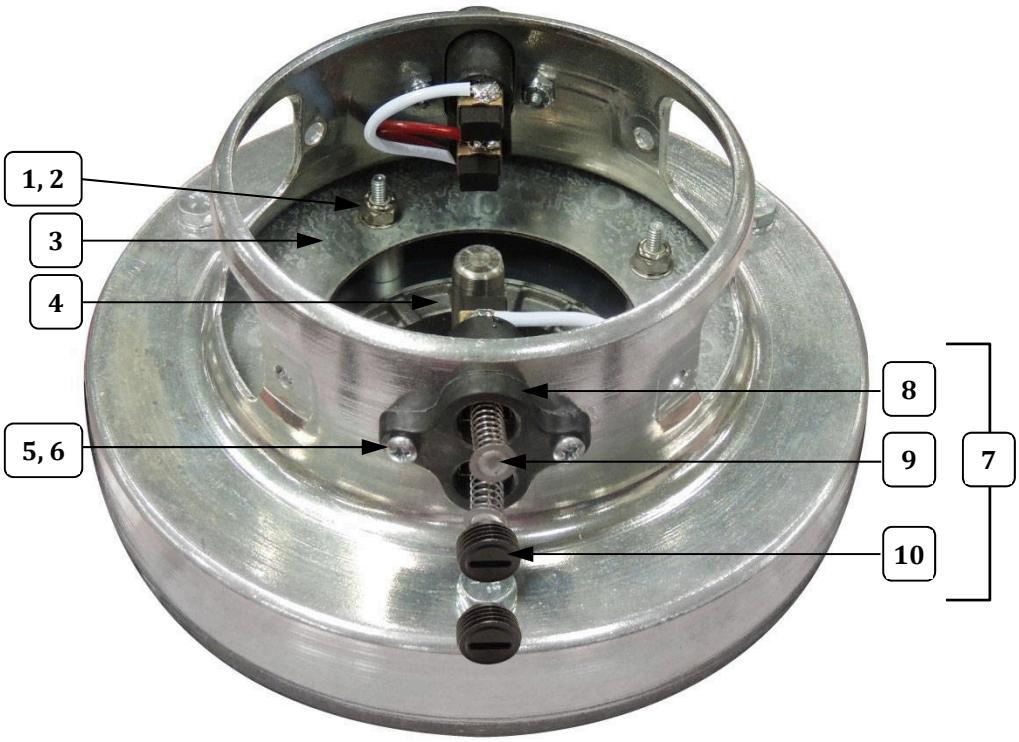


| Item | Part Description | Part Number 3052-00-000 |
|---|---|---|
| 1 | HEX NUT #10-24 ESLOK | 74691 |
| 2 | .188ID FLATWASHER | 77052 |
| 3 | MOTOR MTG PLATE | 42119 |
| 4 | MOTOR, FLOSS MACHINE | 48649 |
| 5 | 6-32 X 1/2 PH PAN HD M/S | 47516 |
| 6 | 6-32 GRIP NUT ZINC PLATED | 47517 |
| 7 | BRUSH HOLDER ASSEMBLY (includes Brushes, Caps and Holders) | 42382W |
| 8 | DUAL BRUSH HOLDER W/LEADS | 42436W |
| 9 | CARBON BRUSH | 55007 |
| 10 | CAP, BRUSH HOLDER | 42138 |

# Cabinet Interior – Parts Breakdown

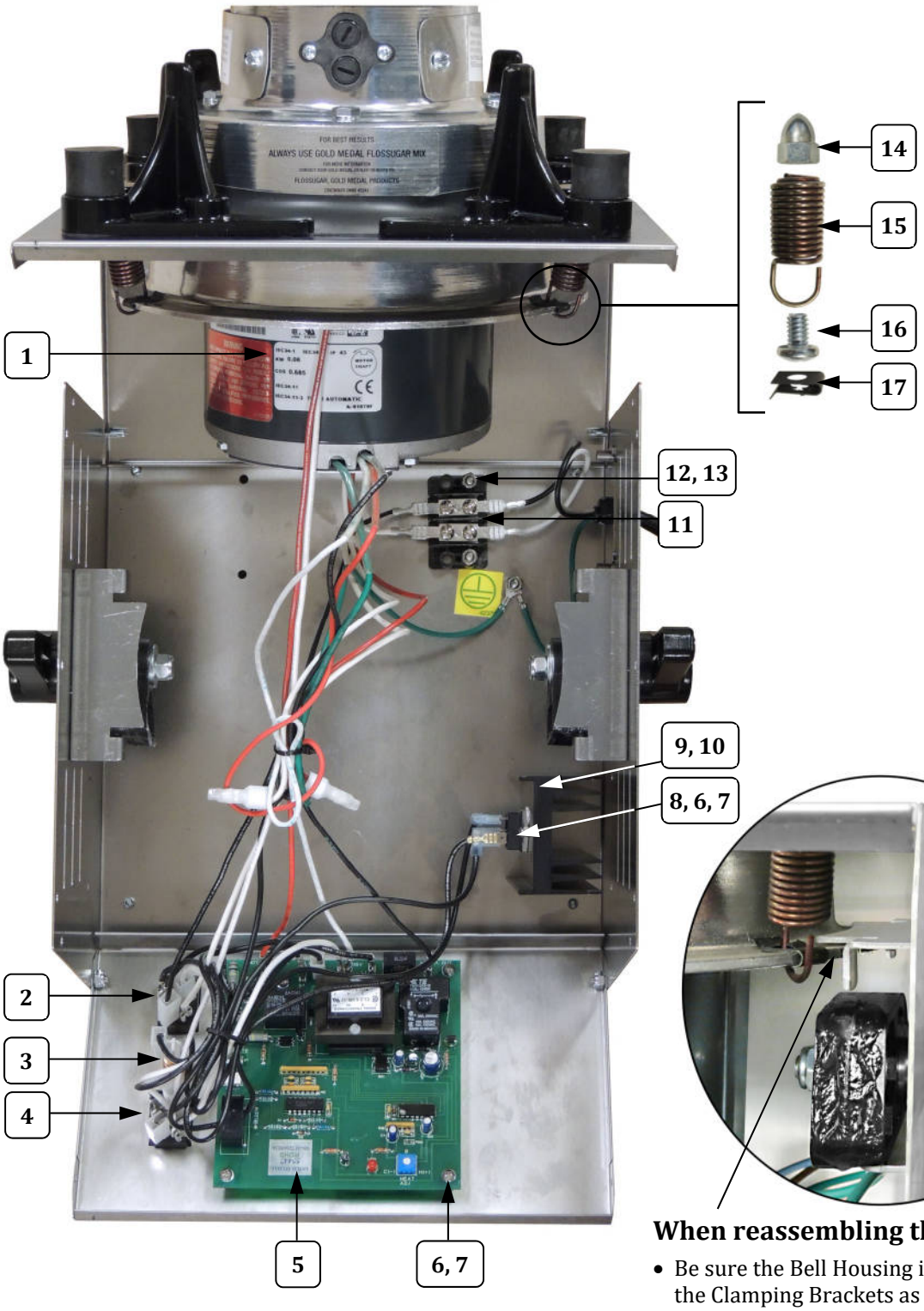


**3052-00-000 interior view shown.**



**When reassembling the unit:**

- Be sure the Bell Housing is located UNDER the Clamping Brackets as shown here.
- Be sure to keep wiring clear of the locking mechanism.

# Cabinet Interior - Parts List

| Item | Part Description | Part Number 3052-00-000 |
|---|---|---|
| 1 | MOTOR, FLOSS MACHINE | 48649 |
| 2 | SWITCH, ROCKER DPDT | 48615 |
| 3 | PILOT LIGHT, AMBER 125V | 55039 |
| 4 | SWITCH, LIGHTED ROCKER GR | 42798 |
| 5 | AUTO WATT CONTROLLER | 55447 |
| 6 | 6-32 X 3/8 PHIL PAN M/S | 39000 |
| 7 | WASHER #6 INTERNAL TOOTH | 76188 |
| 8 | TRIAC, 35A 600V | 55155 |
| 9 | HEAT SINK | 48673 |
| 10 | 10-32 X 1/2 TRUSS HEAD | 12189 |
| 11 | TERMINAL BLOCK, 2 POS | 55620 |
| 12 | 8-32 X 3/4 PHIL PAN MS SS | 39007 |
| 13 | HEX NUT #8-32 STAINLESS | 89129 |
| 14 | ACORN NUT 1/4-20 | 49068 |
| 15 | SPRING, SUSPENSION MEDIUM | 42524 |
| 16 | SCREW 1/4-20X3/8 PN HD PH | 42360 |
| 17 | 10-24 TINNERMAM FASTENER | 42221 |

# Floss Pan and Whirlgrip Stabilizer

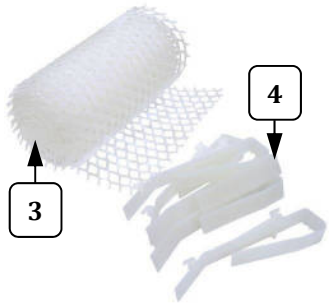




2 **Whirgrip Stabilizer** (includes Floss Stabilizer and Clips)

1

| Item | Part Description | Part Number 3052-00-000 |
|---|---|---|
| 1 | FLOSS PAN, 0.080 ALUM | 42040 |
| 2 | WHIRLGRIP STABILIZER (Includes Floss Stabilizer and Clips) | 3010 |
| 3 | FLOSS STABILIZER (Web) | 43032 |
| 4 | WHIRLGRIP CLIPS | 77470 |

# Wiring Diagram

## Model No. 3052-00-000

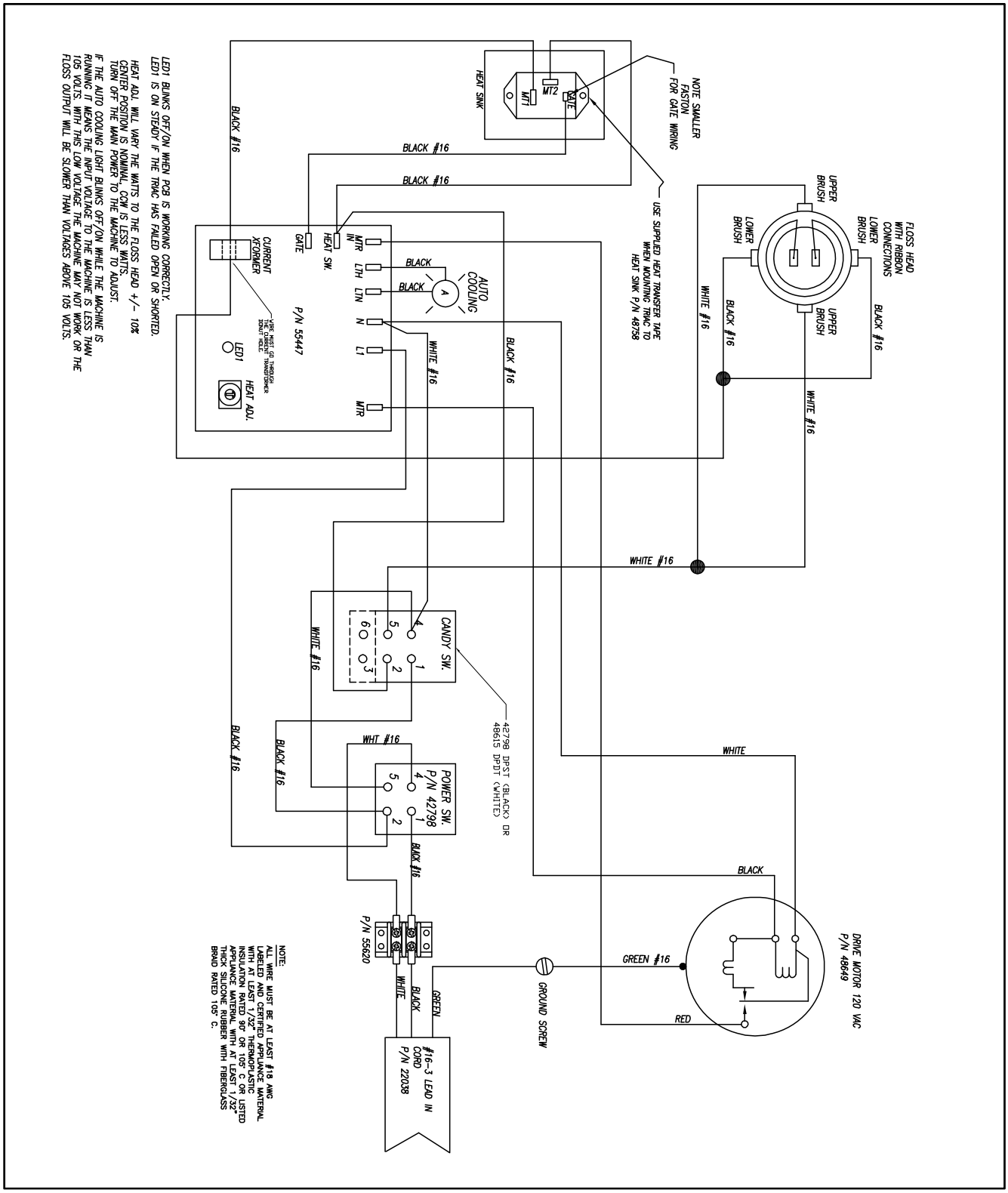

# WARRANTY

Gold Medal Products Co. warrants to the original purchaser each item of its manufacture to be free of defects in workmanship and material under normal use and service. Gold Medal Products Co.'s obligation under this warranty is limited solely to repairing or replacing parts, f.o.b. Cincinnati, Ohio, which in its judgment are defective in workmanship or material and which are returned, freight prepaid, to its Cincinnati, Ohio factory or other designated point. Except for "Perishable Parts" on specific machines, the above warranty applies for a period of two (2) years from the date of original sale to the original purchaser of equipment when recommended operating instructions and maintenance procedures have been followed. These are packed with the machine. Parts warranty is two (2) years, labor is six (6) months.

THIS WARRANTY IS IN LIEU OF ALL OTHER WARRANTIES EXPRESSED OR IMPLIED, AND OF ALL OTHER OBLIGATIONS OR LIABILITIES ON OUR PART, INCLUDING THE IMPLIED WARRANTY OF MERCHANTABILITY. THERE ARE NO WARRANTIES WHICH EXTEND BEYOND THE DESCRIPTION ON THE FACE HEREOF. In no event shall Gold Medal Products Co. be liable for special, incidental or consequential damages. No claim under this warranty will be honored if the equipment covered has been misused, neglected, damaged in transit, or has been tampered with or changed in any way. No claim under this warranty shall be honored in the event that components in the unit at the time of the claim were not supplied or approved by Gold Medal Products Co. This warranty is effective only when electrical items have been properly attached to city utility lines only at proper voltages. This warranty is not transferable without the written consent of Gold Medal Products Co.

The term "Original Purchaser" as used in this warranty shall be deemed to mean that person, firm, association, or corporation who was billed by the GOLD MEDAL PRODUCTS CO., or their authorized distributor for the equipment.

THIS WARRANTY HAS NO EFFECT AND IS VOID UNLESS THE ORIGINAL PURCHASER FIRST CALLS GOLD MEDAL PRODUCTS CO. AT 1-800-543-0862 TO DISCUSS WITH OUR SERVICE REPRESENTATIVE THE EQUIPMENT PROBLEM, AND, IF NECESSARY, FOR INSTRUCTIONS CONCERNING THE REPAIR OR REPLACEMENT OF PARTS.

*NOTE: This equipment is manufactured and sold for commercial use only.*

GOLD MEDAL® PRODUCTS CO.
10700 Medallion Drive, Cincinnati, Ohio 45241-4807 USA
gmpopcorn.com
Phone: (800) 543-0862 (513) 769-7676 Fax: (800) 542-1496 (513) 769-8500

© 2018 – The text, descriptions, graphics, layout, and other material in this publication are the exclusive property of Gold Medal Products Co. and shall not be used, copied, reproduced, or published in any fashion, including website display, without its express written consent.