PRS-W8-AF12-HDLFR



Width:	12 3/4"
Depth:	14""
Height:	44 11/16"
Flow Rate:	0.65 GPM
Connection:	8" - 1/2" NPT Inlet
Weight:	11 lbs
Shipping Size (Inch):	25.59" x 13.78" x 17.72"
Warranty	1 Year Parts & Labour

Pre-Rinse Faucets

Features

- ☑ Wall-mounted pre-rinse faucet, low-flow (<0.65 GPM), lead-free construction.
- ☑ Durable, heavy-gauge construction for long-lasting performance
- ☑ Chrome-plated body with chrome-plated zinc-alloy handle
- ☑ 8" center faucet with 12" add-on faucet attachment
- ☑ 24" (610 mm) chrome-plated brass riser pipe, 44" (1118 mm) overall height
- ☑ Flexible stainless-steel hose with commercial-style spray valve
- ☑ 6" (152 mm) chrome-plated wall bracket
- ☑ Includes 1/4-turn ceramic cartridge valve

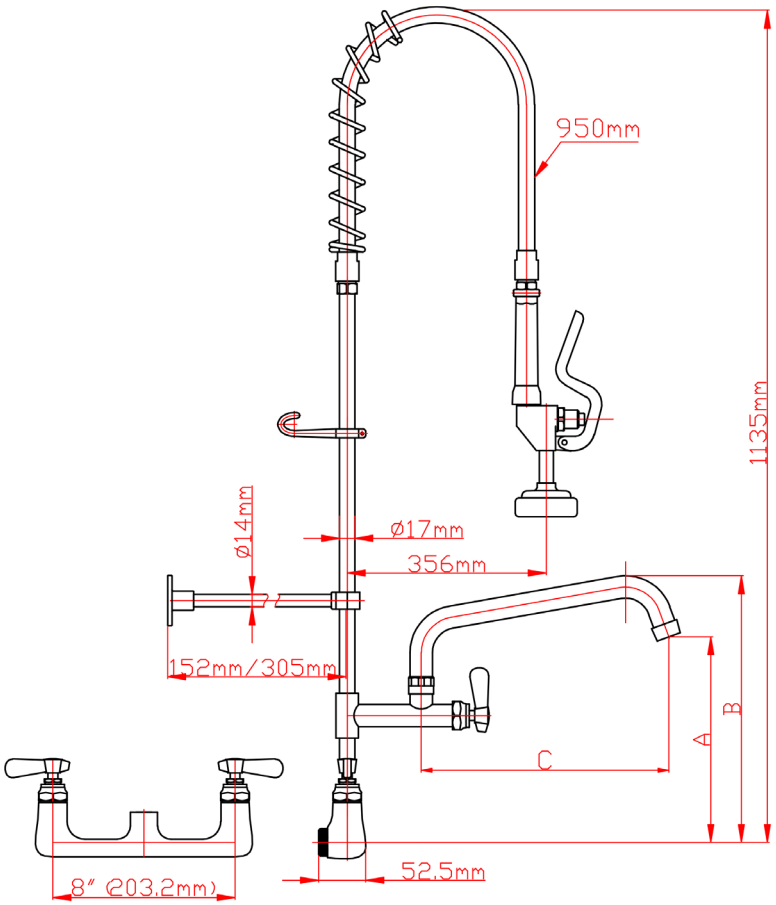

Specifcations are subject to change.
121 McLean Drive, Vancouver, British Columbia