WISCO INDUSTRIES, INC.

FOOD WARMING/
MERCHANDISING CABINET



MODEL 925W

This warmer/merchandiser provides heated circulating air to keep foods fresh and evenly warmed. It is constructed of stainless steel and tempered glass for a clean and attractive presentation. This unit also features a shelving system that allows you to adjust the shelves to meet your specific needs.

FEATURES:

- "Ready to Go" graphic panels
- Glass and stainless steel construction
- Adjustable Thermostat
- Temperatures from 80°F to above 150°F
- Comes standard with 4 adjustable shelves
- Additional shelves available (#0018630)

WARNING: These products can expose you to chemicals including Nickel (Metallic) which are known to the State of California to cause cancer. For more information go to www.P65Warnings.ca.gov

ELECTRICAL DATA:

VOLTS:	120	AMPS:	7.9	WATTS:	946

- Best when operated on an individual branch circuit
- Approx. 70" power cord length

DIMENSIONS:

- External: 18¾"W × 18¾"D × 29½"H
- Internal: 18-3/16"W (glass to glass)
  18"D (glass to glass)

SHIPPING INFORMATION:

- SHIPPING DIMENSIONS: 18¾"W × 18¾"D × 29½"H
- SHIPPING WEIGHT: 85 LBS.
- MUST SHIP VIA FREIGHT TRUCK

c UL us LISTED

NSF

FP140106 REV: A

IMPORTANT: Read the following safety and operation instructions to avoid damage to equipment or property.

Plug unit into a properly grounded electrical outlet of the correct voltage, size, and plug configuration for this unit. We recommend usage on an individual branch circuit of at least 15 amps for best results. Failure to do so may result in decreased performance of the warmer.

Exterior surfaces on unit may get hot. Use caution when touching these areas to avoid injury.

Only shatter resistant light bulbs which meet or exceed NSF Standards specifically designed for food holding units must be used. Breakage of bulbs not specially coated could result in personal injury and/or food contamination.

Unplug warmer when not in use.

OPERATION:

This warmer is designed to maintain food product at or above the optimum temperature. It is not designed or intended to heat up or cook food to the serving temperature. Product is to be prepared to a temperature of above 160˚F before placing in the warmer. Do not place product on its side as this will affect the internal holding temperatures of the product.

EQUIPMENT SETUP

The amount of product placed in the warmer will affect the performance of the warmer. We suggest periodically checking the internal temperature of product and adjusting the temperature settings if necessary. Keep doors closed when not serving.

OPERATING INSTRUCTIONS

1. Plug unit in, and turn the Power Switch located at the control panel to “ON”.
2. Set the Temperature Selector to the desired temperature.
3. Preheat unit for 30 minutes
4. Place food items in warmer. Food items are to be heated to proper serving temperature before being placed in warmer.

TROUBLESHOOTING:

Unplug unit from power source, and allow to cool completely before performing any maintenance or cleaning.

Unit not working:
• Check the power switch position, power cord, and/or electrical circuit.

Display light not working:
• Tighten or replace the bulb.

Loud noise coming from the unit:
• Check to see that blower motor is functioning properly

Unit not heating properly:
• Has food been prepared in advance and placed in warmer at proper serving temperature?
• Check heat settings. Is it at correct setting for your food product?

• Turn unit on, open the door, and verify that hot air is being blown into unit. If not, your blower motor may not be functioning properly.
• If the air being blown in is not hot, then the thermostat may not be functioning properly.

MAINTENANCE:

Only shatter resistant light bulbs which meet or exceed NSF Standards specifically designed for food holding units must be used. Breakage of bulbs not specially coated could result in personal injury and/or food contamination.

Disconnect the power supply cord, and wait until unit has completely cooled. Unscrew light, and replace with a new specially coated bulb of the same style and wattage.

CLEANING INSTRUCTIONS

Unplug unit from power source, and allow to cool completely before performing any maintenance or cleaning.

Unit is not waterproof. Do not submerge in water. Do not operate if unit has been submerged in water.

The use of any type of ammonia, alcohol or chlorine based household cleaners will cause cracking of the door/enclosure and is not covered under any warranty. Use warm soapy water and a soft cloth only.

Do not steam clean or use excessive water on unit to avoid personal injury or electrical shock.

It is recommended that the interior and exterior surfaces be cleaned daily with a mild soap and damp Microfiber cloth. Stubborn stains on base of unit and/or racks may be removed with a non-abrasive cleaner and a damp Microfiber cloth. Usage of an abrasive cleanser could scratch or damage the finish of your unit.

PLEASE USE MICROFIBER CLOTH!

1. Unplug unit from electrical supply
2. Let unit cool before cleaning
3. Clean with warm soapy water and a soft cloth only

NOTES:

PARTS LIST:

MODEL 925W

ITEM #	PART#	DESCRIPTION
1.	0017379	HIGH LIMIT THERMOSTAT
2.	0019577	800W, 115V HEATING ELEMENT
3.	0022309SK	BLOWER MOTOR (SEE REPAIR INSTRUCTIONS TAB BELOW)
4.	0017249SK	AIR THERMOSTAT KIT
5.	I013638	SIDE PANEL DECAL
6.	0018656	3/16” CLEAR TEMPERED GLASS
7.	0018611	REAR COLUMN
8.	0017436	NYLON GLIDE
9.	0018609	RIGHT DOOR COLUMN
10.	0018629	RACK HOLDER
11.	0017936	GLASS DOOR ASSEMBLY SERVICE KIT
12.	00448	POWER CORD – 15A
13.	0016024	STRAIN RELIEF
14.	0017271	DOOR HINGE
15.	0018630	WIRE RACK
16.	0018605	LEFT DOOR COLUMN
17.	0016123	THERMOMETER
18.	0016133	#8-32 SCREW
19.	0017265	TUFFSKIN INCANDESCENT LAMP
20.	0017274	THERMOSTAT KNOB
21.	0016119	ON/OFF SWITCH
22.	I013477	CONTROL PANEL DECAL
23.	0016307	LIGHT SOCKET ASSEMBLY
24.	0017211	TERMINAL BLOCK
*	0018641	FASCO BRACKET
*	0018642	FASCO END PLATE

MODEL 925W EXPLODED VIEW

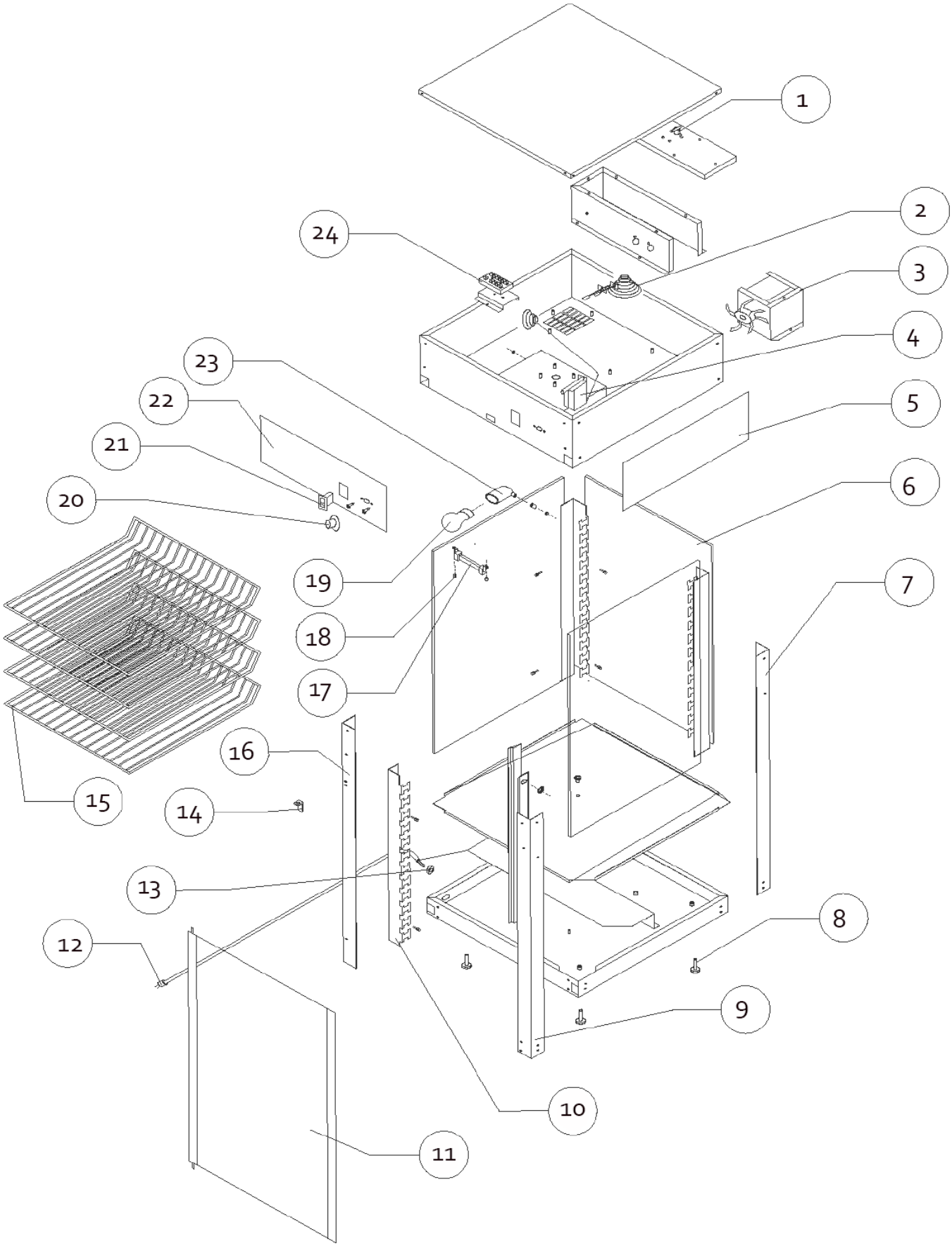

MODEL 925W WIRING DIAGRAM

REV: ORIG

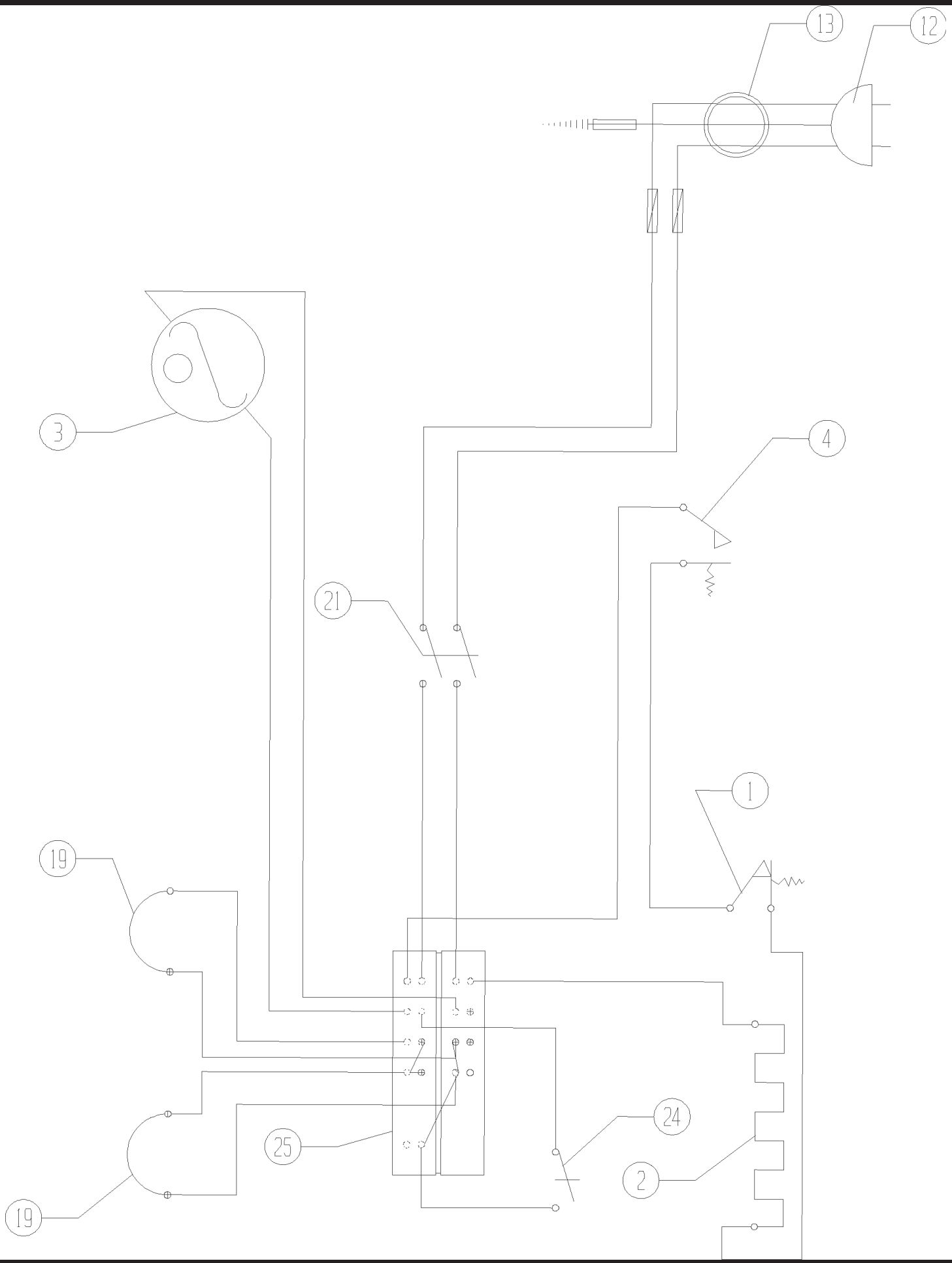

WISCO INDUSTRIES, INC.

LIMITED WARRANTY/
RETURN POLICY

1 YEAR REPLACEMENT/EXCHANGE

Wisco Industries, Inc. warrants its equipment against defects in materials and workmanship subject to the following conditions:

Should any product fail to function in its intended manner under normal use within the limits defined in this warranty, Wisco Industries will determine if the item is to be repaired or replaced by Wisco Industries. Failure to follow authorizing instructions may void any claim and/or warranty.

* Contact Wisco Industries for repair/replacement by calling (608) 835-3106 or toll free (800) 999-4726.
  You can also email us at: contact@wiscoind.com
* An authorizing RMA# must be obtained through Wisco Industries BEFORE any warranty issues can be resolved. Failure to do so in advance may void the warranty/ claim resulting in Wisco Industries not being responsible for any incurred expenses and/or charges.
* At time of call Wisco Industries will assist you in:
  - getting your unit replaced/exchanged
  - and/or obtaining repair parts
  - and/or authorizing a service agent

This warranty covers products shipped into the 48 contiguous Unites States, Hawaii and metropolitan areas of Alaska only. Warranty for international or areas not listed above will consist of replacement of parts only. There will be no labor coverage and parts must be shipped to an address within the 48 contiguous United States, Hawaii or metropolitan areas of Alaska only.

Time Period
One year from date of shipment from our manufacturing facility. Parts replaced under this warranty are warranted for the un-expired portion of the original product warranty only.

Exclusions
The following conditions are not covered by warranty:
- Equipment failure relating to improper installation and improper utility connection or supply.
- Equipment that has not been properly maintained or damage from improper cleaning and/or water damage to controls.
- Equipment that has not been used for its intended purpose or has been subject to misuse or misapplication, neglect, abuse, accident, alteration, negligence, damage during subsequent transit, delivery or installation, fire, flood, riot or act of god.
- Equipment that has the model number or serial number removed or altered.

WISCO INDUSTRIES, INC. DISCLAIMS AND EXCLUDES ANY AND ALL OTHER EXPRESS OR IMPLIED WARRANTIES, INCLUDING WITHOUT LIMITATION, ANY AND ALL WARRANTIES OF MERCHANTABILITY OR FITNESS FOR A PARTICULAR PURPOSE.
Buyer agrees that its SOLE AND EXCLUSIVE REMEDY against Wisco and Wisco's SOLE AND EXCLUSIVE LIABILITY arising out of any defect or nonconformity in the product shall be replacement/exchange of such nonconforming countertop food service equipment at Wisco's expense. No countertop food service equipment shall be returned without Wisco's consent. IT IS AGREED THAT WISCO'S MAXIMUM LIABILITY SHALL NOT IN ANY CASE EXCEED THE SALE PRICE FOR THE COUNTERTOP EQUIPMENT CLAIMED TO BE DEFECTIVE OR NONCONFORMING.

Without limiting the generality of the foregoing, SUCH WARRANTIES DO NOT COVER: Glass, plastic enclosures/panels, door assemblies, hardware, light bulbs & wire pizza oven heating elements.

SHIPPING DAMAGE

If the outside packaging of your order is visibly dented, crushed, torn or otherwise significantly damaged, or if you move the carton and you hear broken glass, please reject the shipment while driver is still with you if possible. Please call us at (800)999-4726 or email contact@wiscoind.com to notify us of the issue. We will confirm the damage with the carrier and re-ship your order immediately.

RETURN POLICY

You may return any unused, undamaged items within 30 days of receipt at your expense. We will issue a refund in the form of your original payment, less a 20% re-stock fee. Wisco Industries will not reimburse any shipping and handling fees. All returns must be received in resalable condition. Wisco Industries will not accept a return with shipping damage.

If you would like to return an item please call us at 608-835-3106 or toll free at 1-800-999-4726 and ask for our Food Service Equipment Division or you may send an email to us at: contact@wiscoind.com You will be given a return # and return instructions. We can not accept returns without a return #. Please be sure to include a copy of the packing list with the return.

REV. 1-13-16